Check for updates

Received: 3 May 2023 | Revised: 9 May 2023 | Accepted: 13 June 2023

DOI: 10.1111/jne.13318

CLINICAL GUIDELINE

Journal of Neuroendocrinology WILEY

European Neuroendocrine Tumor Society 2023 guidance paper for functioning pancreatic neuroendocrine tumour syndromes

Johannes Hofland[1] | Massimo Falconi[2] | Emanuel Christ[3,4] | Justo P. Castaño[5,6,7,8] | Antongiulio Faggiano[9] | Angela Lamarca[10,11] | Aurel Perren[12] | Simona Petrucci[13,14] | Vikas Prasad[15] | Philippe Ruszniewski[16] | Christina Thirlwell[17] | Marie-Pierre Vullierme[18] | Staffan Welin[19] | Detlef K. Bartsch[20]

[1]Department of Internal Medicine, Section of Endocrinology, ENETS Centre of Excellence, Erasmus MC Cancer Institute, Rotterdam, The Netherlands

[2]Pancreatic Surgery and Transplantation Unit, Pancreas Translational and Clinical Research Centre, ENETS Center of Excellence, San Raffaele Scientific Institute IRCCS, Milan, Italy

[3]ENETS Centre of Excellence for Neuroendocrine and Endocrine Tumours, University Hospital Basel, Basel, Switzerland

[4]Department of Endocrinology, Diabetology and Metabolism, University Hospital Basel, Basel, Switzerland

[5]Maimonides Biomedical Research Institute of Córdoba, Córdoba, Spain

[6]Department of Cell Biology, Physiology, and Immunology, University of Córdoba, Córdoba, Spain

[7]Hospital Universitario Reina Sofía, Córdoba, Spain

[8]Centro de Investigación Biomédica en Red de Fisiopatología de la Obesidad y Nutrición (CIBERobn), Córdoba, Spain

[9]Endocrinology Unit, Department of Clinical and Molecular Medicine, Sant'Andrea Hospital, ENETS Centre of Excellence, Sapienza University of Rome, Rome, Italy

[10]Department of Oncology – OncoHealth Institute, Fundación Jiménez Díaz University Hospital, Madrid, Spain

[11]Department of Medical Oncology, The Christie NHS Foundation, Manchester, Division of Cancer Sciences, University of Manchester, Manchester, UK

[12]Institute of Pathology, University of Bern, Bern, Switzerland

[13]Department of Clinical and Molecular Medicine, Faculty of Medicine and Psychology, Sapienza University of Rome, Rome, Italy

[14]Medical Genetics and Advanced Cell Diagnostics Unit, Sant Andrea University Hospital, Rome, Italy

[15]Division of Nuclear Medicine, Mallinckrodt Institute of Radiology, Washington University in St. Louis, St. Louis, Missouri, USA

[16]Department of Pancreatology, FHU MOSAIC, Université Paris Cité – APHP Hôpital Beaujon, Clichy, France

[17]University of Exeter Medical School, University of Exeter, Exeter, UK

[18]Centre Hospitalier Annecy Genevois (CHANGE), Université Paris-Cité, Praticien Hospitalier Imagerie Médicale, Annecy, France

[19]Department of Endocrine Oncology, Uppsala University Hospital, Uppsala, Sweden

[20]Department of Visceral, Thoracic and Vascular Surgery, Phillips-University Marburg and University Hospital Gießen Marburg GmbH, Marburg, Germany

Correspondence
Johannes Hofland, Department of Internal Medicine, Section of Endocrinology, Erasmus MC Cancer Institute, Rotterdam, The Netherlands.
Email: j.hofland@erasmusmc.nl

Abstract

This ENETS guidance paper aims to provide practical advice to clinicians for the diagnosis, treatment and follow-up of functioning syndromes in pancreatic neuroendocrine tumours (NET). A NET-associated functioning syndrome is defined by the presence of a clinical syndrome combined with biochemical evidence of inappropriately elevated

This is an open access article under the terms of the Creative Commons Attribution-NonCommercial-NoDerivs License, which permits use and distribution in any medium, provided the original work is properly cited, the use is non-commercial and no modifications or adaptations are made.
© 2023 The Authors. *Journal of Neuroendocrinology* published by John Wiley & Sons Ltd on behalf of British Society for Neuroendocrinology.

hormonal levels. Different hormonal syndromes can be encountered in pancreatic NET patients, including insulinoma, gastrinoma as well as the rare glucagonoma, VIPoma, ACTHoma, PTHrPoma, carcinoid syndrome, calcitoninoma, GHRHoma and somatostatinoma. The recommendations provided in this paper focus on the biochemical, genetic and imaging work-up as well as therapeutic management of the individual hormonal syndromes in well-differentiated, grade 1-3, functioning NET with the primary tumour originating in the pancreas, and for specific subtypes also in the duodenum.

KEYWORDS
ENETS, gastrinoma, guideline, insulinoma, neuroendocrine tumour, VIPoma

INTRODUCTION

Background

This European Neuroendocrine Tumor Society (ENETS) guidance paper aims to provide practical guidance to clinicians for the diagnosis, treatment and follow-up of functioning syndromes in pancreatic neuroendocrine tumours (Pan-NET). Evidence and guidance are presented in the context of nine dedicated clinical questions (Table 1). The paper provides an update from the previous ENETS guidelines on Pan-NET with hormonal excess[1,2] with an emphasis on new developments and controversial areas. We focus on management of the hormonal syndromes in well-differentiated, grade 1–3, functioning NET with the primary tumour originating in the pancreas, and for specific subtypes also in the duodenum. The reader is referred to the ENETS 2023 guidance papers on non-functioning (NF-)Pan-NET and gastroduodenal NET for primary oncological treatment of pancreatic or duodenal NET, whereas management of poorly differentiated counterparts is discussed in the ENETS 2023 guidance paper for digestive NEC.[3] All recommendations in this guidance paper are graded according to the level of evidence (1–5) and strength of recommendation (A–D) (Table 2).

TABLE 1 Nine clinical questions for functional Pan-NET scenarios.

1	How should we define and characterise an insulinoma and differentiate this from other causes of hypoglycaemia?
2	Which biochemical tests should be performed in patients with clinical suspicion of gastrinoma?
3	Which biochemical test should be performed to diagnose rare functioning syndromes (glucagonoma, VIPoma, ACTHoma, carcinoid syndrome, PTHrPoma, calcitoninoma, GHRHoma, somatostatinoma) in patients?
4	Which patients with functioning Pan-NET syndromes should be referred for genetic counselling?
5	What is the difference in the imaging work-up of functioning Pan-NET as compared to non-functioning Pan-NET?
6	What is the appropriate surgical management of localised insulinoma?
7	What is the appropriate surgical management of localised gastrinoma?
8	What is the appropriate management of patients with advanced disease and functioning Pan-NET syndromes?
9	What is the recommended follow-up in functioning Pan-NET syndromes after curative resection?

Definitions

A functioning NET syndrome is defined by the presence of a clinical syndrome combined with biochemical evidence of inappropriately elevated hormonal levels. Some NET may secrete biologically inactive hormonal variants or bioactive hormones at insufficient levels to elicit symptoms, and these should consequently be classified as non-functioning. Likewise, positive hormonal expression in NET cells on immunohistochemical staining is insufficient for the diagnosis of a functioning NET syndrome. Due to the tissue-specific localisation of neuroendocrine cell subtypes along the alimentary tract, the pancreaticoduodenal region gives rises to specific functioning NET syndromes. Some of these syndromes are well characterised, while others are extremely uncommon and remain poorly described (Table 3).

Although rare, Pan-NET can simultaneously lead to the combined presence of more than one functioning syndrome in a patient, by secretion of multiple bioactive hormones. Metachronous functioning syndromes marked by the development of a new functioning syndrome can occur in up to 3%–6% of Pan-NET patients during the course of the disease, particularly when the tumour progresses.[4,5] The molecular basis (i.e., genomic, epigenomic, transcriptomic) underlying Pan-NET oncogenesis and tumour development have been systematically studied in recent years. However, the clinical impact of this work remains limited, with many studies requiring further validation.

Q1: How should we define and characterise an insulinoma and differentiate this from other causes of hypoglycaemia?

Clinical history

A careful history in a non-diabetic patient with a history of hypoglycaemia should start from a well-documented Whipple's triad[6] [3, A], which consists of:

13652826, 2023, 8, Downloaded from https://onlinelibrary.wiley.com/doi/10.1111/jne.13318, Wiley Online Library on [13/08/2025]. See the Terms and Conditions (https://onlinelibrary.wiley.com/terms-and-conditions) on Wiley Online Library for rules of use; OA articles are governed by the applicable Creative Commons License

TABLE 2 Level of evidence and strength of recommendations.

Level of evidence	Therapy	Diagnosis
1a	Systematic review (with homogeneity) of RCT	Systematic review (with homogeneity) of level 1 diagnostic studies; Clinical decision rules/ validating cohort study with good reference standards
1b	RCT (with narrow confidence intervals)	
2a	Systematic review of cohort studies	Systematic review (with homogeneity) of level >2 diagnostic studies
2b	Individual cohort studies or low quality RCT	Exploratory cohort study with good reference standards; Clinical Decision Rule after derivation.
3a	Systematic review (with homogeneity) of case-controlled studies	Systematic review (with homogeneity) of 3b and better studies
3b	Individual case-controlled studies	Non-consecutive study; or without consistently applied reference standards
4	Case series (and poor-quality case-controlled studies)	Case–control study, poor or non-independent reference standard
5	Expert opinion without explicit critical appraisal	Expert opinion without explicit critical appraisal
Grade of recommendation		
A	Strong	
B	Moderate	
C	Low	
D	Very low	

Abbreviation: RCT, randomised controlled trial.

- Symptoms consistent with hypoglycaemia.
- Documentation of a low glucose concentration.
- Relief of the symptoms after ingestion of carbohydrates.

Symptoms of hypoglycaemia include those of the autonomous nervous system, such as sweating, weakness, tachycardia and hunger, as well as those of neuroglycopenia, including irritability, cognitive deficits, transient focal neurological deficits, seizures and coma.[7] Since these symptoms lack specificity, the average time until biochemical evaluation and diagnosis of endogenous hyperinsulinaemic hypoglycaemia (EHH) is at least 2 years, often up to 5 years or even longer.[8] Very often during this period of time the various symptoms of the autonomic nervous system may vanish due to hypoglycaemic unawareness.[9] Importantly, these symptoms have to be related to documented low blood glucose levels (at least <2.5 mmol/L or 45 mg/dL) to qualify for further biochemical evaluation [3, A].

An additional helpful detail of history is the significant increase in weight over the last years in more than 50% of the patients.[7] Finally, the timing of the symptoms is of utmost importance (fasting – during the night or postprandial) as well as the medication taken by the patient and by family members (i.e., risk of hypoglycaemia factitia), a familial or personal history of autoimmune diseases, and previous bariatric surgery[6] [5, B].

Biochemical assessment

The presence of a hypoglycaemic disorder in a patient without diabetes should be confirmed using a collection tube that contains an inhibitor of glycolysis, and processing should not be delayed. Importantly, low blood glucose values using reflectance metres are not sufficiently reliable in the low blood glucose range [4, B]. To date, data are insufficient as to whether a continuous glucose monitoring system (CGMS) has sufficient sensitivity and specificity as a screening tool to confirm or rule out significant hypoglycaemia.[10]

In a patient with symptoms consistent with hypoglycaemia and documented spontaneous hypoglycaemia <2.5 mmol/L (45 mg/dL) additional biochemical assessment including insulin, C-peptide and, if possible, pro-insulin and β-hydroxy-butyrate (BHOB) should be performed at the time of hypoglycaemia. In cases of suspected factitious hypoglycaemia, assessment of oral hypoglycaemic agents (sulphonylurea and meglitinides) is recommended. If values are consistent with EHH, no further provocative testing is necessary[6] [3, A].

In an asymptomatic patient, hypoglycaemia counterregulatory hormones (cortisol, growth hormone) should be evaluated and the autoimmune insulin antibody[11] or insulin receptor antibody syndrome[12] should be excluded in suspected cases, although these latter syndromes are very rare. Once deficiency of counterregulatory hormones and insulin autoimmune syndrome are excluded, provocative testing is indicated: in cases of fasting hypoglycaemia, the 72 h fasting test is recommended; in cases of postprandial symptomatic patients, a mixed meal-test is required[6] [3, A], Figure 1.

Fasting test

This test should be performed as an in-patient on a dedicated endocrine ward. A meticulous protocol is needed, with correct labelling of tubes, noting time points of blood sampling and documenting patients' symptoms, in particular neuroglycopenic ones. Blood samples for the above-mentioned parameters are repeatedly assessed during the fast until symptomatic hypoglycaemia occurs associated with a glucose level usually <2.5 mmol/L (45 mg/dL). To assess subtle cognitive dysfunction (neuroglycopenia) repetitive testing using the mini-mental test has been shown to be useful.[13]

13652826, 2023, 8, Downloaded from https://onlinelibrary.wiley.com/doi/10.1111/jne.13318, Wiley Online Library on [13/08/2025]. See the Terms and Conditions (https://onlinelibrary.wiley.com/terms-and-conditions) on Wiley Online Library for rules of use; OA articles are governed by the applicable Creative Commons License

TABLE 3 Overview of the different functional Pan-NET syndromes.

	Clinical features	Biochemical diagnosis	Alternative name
Insulinoma	Fasting hypoglycaemia	(Pro-)insulin, C-peptide during hypoglycaemia	Endogenous hyperinsulinaemic hypoglycaemia
Gastrinoma	Reflux, dyspepsia, ulcers, PPI-responsive diarrhoea	Fasting gastrin >10x URL & gastric pH ≤2	Zollinger-Ellison syndrome
Glucagonoma	Diabetes mellitus, necrolytic migratory erythema, deep venous thrombosis, depression, cheilitis/stomatitis, normocytic anaemia, weight loss, hypoaminoacidaemia, cardiomyopathy	Fasting glucagon >500 pg/mL	
VIPoma	Secretory diarrhoea, hypokalaemia, achlorhydria hypercalcaemia	Fasting VIP >60 nmol/L	Verner-Morrison syndrome
ACTHoma	Hypokalaemia, diabetes mellitus, muscle weakness, hypertension, moon facies, oedema	24 h urine cortisol, midnight salivary cortisol, cortisol after 1 mg dexamethasone overnight, ACTH	Ectopic Cushing's syndrome
PTHrPoma	Hypercalcaemia, hypophosphataemia, elevated alkaline phosphatase	PTH-rP >URL, Suppressed PTH	Humoral hypercalcemia of malignancy
Carcinoid syndrome	Diarrhoea, flushing, asthma, fibrosis	Urine 5-HIAA >50 μmol/24 h Elevated plasma 5-HIAA or serotonin	
Calcitoninoma	Diarrhoea, flushing	Calcitonin >> URL	
GHRHoma	Acral overgrowth, cardiomegaly	IGF-1 >2x URL GHRH >250 mg/L	Ectopic acromegaly
Somatostatinoma	Diabetes mellitus, diarrhoea, steatorrhea, cholelithiasis, hypo−/achlorhydria, weight loss, central hypothyroidism	Fasting somatostatin >> URL	

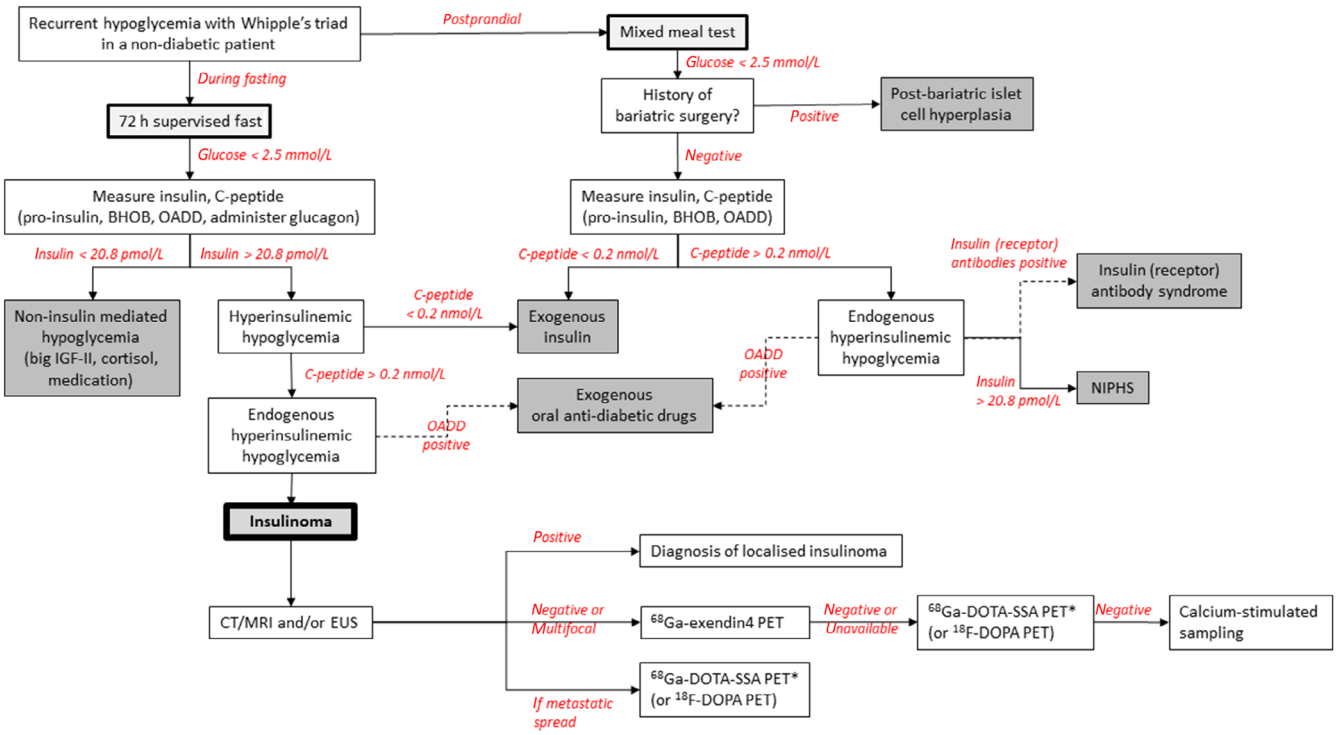

FIGURE 1 Diagnostic algorithm hypoglycaemia. Following the demonstration of Whipple's triad, the timing of hypoglycaemia should prompt evaluation of underlying causes by supervised fast or mixed meal tests. BHOB, β-hydroxy-butyrate; CT, computer tomography; EUS, endoscopic ultrasound; IGF-II, insulin-like growth factor II; MRI, magnetic resonance imaging; NIPHS, non-insulinoma pancreatogenous hypoglycaemia syndrome; OADD, oral anti-diabetic drugs (sulphonylurea and meglitinides); PET, positron emission tomography; SSA, somatostatin analogue. *^{64}Cu-DOTA-SSA can also be used instead of ^{68}Ga-DOTA-SSA.

13652826, 2023, 8, Downloaded from https://onlinelibrary.wiley.com/doi/10.1111/jne.13318, Wiley Online Library on [13/08/2025]. See the Terms and Conditions (https://onlinelibrary.wiley.com/terms-and-conditions) on Wiley Online Library for rules of use; OA articles are governed by the applicable Creative Commons License

Based on the available literature a maximum of 72 h fasting is recommended to firmly exclude EHH. Previous data suggest that significant hypoglycaemia occurs after 12 h of fasting in approximately 40%, after 24 h in 67% and after 48 h in 95% of cases[8] [3, A]. Some authors suggest the administration of 1 mg glucagon intravenously at the end of the fasting test, with glucose measured at 10, 20 and 30 min after injection. This has the advantage of treating the hypoglycaemia and at the same time confirming the EHH diagnosis; see below for interpretation of the data [3, C].

Mixed meal test

We propose a standardised non-liquid meal (typically breakfast) that is – on the history – associated with hypoglycaemic symptoms. Samples are collected for analysis of plasma glucose, insulin, C-peptide and proinsulin, measured at baseline and then every 30 min until symptomatic hypoglycaemia occurs or maximally for 5 h.[14] Before administering carbohydrates, a last blood sample for the analysis of the above-mentioned parameters and, if not yet performed, for insulin antibodies and oral hypoglycaemic agents is collected. Of note, approximately 5% of patients with insulinomas will show post-prandial but not fasting hypoglycaemia.

Interpretation of the laboratory results

The differential diagnosis of non-diabetic hypoglycaemic disorders includes EHH with the underlying diagnosis of insulinoma, non-insulinoma pancreatogenous hypoglycaemia syndrome (NIPHS) due to islet hypertrophy, insulinomatosis and nesidioblastosis versus exogenous administration of insulin secretagogues or insulin as well as the insulin antibody syndrome.[14] Clinical and biochemical characteristics are summarised in Figure 1.

Insulin and C-peptide values have to be interpreted in relation to the glucose level at the same time point and NOT in relation to the normal range as indicated by the hospital laboratory [3, A]. We recommend that a nomogram should be used as suggested by Service[14] for the interpretation of data related to glucose, insulin, C-peptide, proinsulin and BHOB (Table 4).

Recommendations:

- Fasting hypoglycaemia in a non-diabetic patient requires documentation of Whipple's triad, which, if positive, should be followed by a fasting test [5, A].
- Endogenous hyperinsulinaemic hypoglycaemia should be excluded in the presence of a neurological symptom without clear diagnosis [5, B].
- The proof of inappropiate insulin and C-peptide levels in relation to hypoglycaemia is critical for the diagnosis and can be obtained in an emergency situation or during a provocative fasting test [3, A].

Q2: Which biochemical tests should be performed in patients with clinical suspicion of gastrinoma?

The diagnosis of gastrinoma, responsible for the Zollinger-Ellison syndrome (ZES), should be suspected in a patient with clinical symptoms of acid hypersecretion: peptic ulcer disease (PUD), severe gastroesophageal reflux disease (GERD) and/or diarrhoea that is responsive to proton pump inhibitors (PPI).[15] However, due to early prescription of PPI, symptoms are often less pronounced than in the past, especially for complicated PUD, and only a minority of patients will present with multiple ulcers. PUD without *Helicobacter pylori* infection, use of non-steroidal anti-inflammatory drugs (NSAIDs), Crohn's disease or malignancy or with a history of multiple, recurrent, refractory ulcers or ulcers on atypical locations should raise suspicion of gastrinoma. The classic diagnosis of gastrinoma requires the demonstration of 10x elevated fasting serum gastrin (FSG) levels in combination with the presence of a gastric fluid pH ≤2 [3, B].[16] Demonstration of gastric acid hypersecretion by means of gastric fluid pH evaluation can be obtained through nasogastric tube or oesophagogastroduodenoscopy (OGD) using electrode, filter paper or biochemical evaluation of aspirate. Both diagnostic criteria are fundamental because the differential diagnosis of hypergastrinaemia includes more common causes of achlorhydria or hypochlorhydria states, such as chronic atrophic gastritis, PPI therapy, renal failure, and *Helicobacter pylori* infection. Other rare causes of elevated FSG levels, such as gastric outlet obstruction, short bowel syndrome, retained gastric antrum syndrome and juvenile gastric polyposis, can be excluded by history taking or OGD.

The diagnosis of gastrinoma syndrome is complicated due to intermediate FSG levels and widespread PPI use. Elevated FSG levels up to 10 times the upper reference level of normal without the use of PPIs can be observed in a substantial subset of patients with a gastrinoma. The secretin stimulation test and measurement of the gastric basal acid output have been requested in former times for the diagnosis of gastrinoma, but these tests have disappeared from clinical practice.[17] To complicate the diagnosis further, patients presenting with PUD or GERD will often be on PPI treatment before specialist referral, causing elevations of gastrin levels that overlap with that of the gastrinoma syndrome.[18] PPI withdrawal in gastrinoma patients is at risk of inducing rebound acid hypersecretion and exacerbating acid-related symptoms, potentially causing ulcers, bleeding, or perforation. Therefore, caution should be applied when attempting temporary PPI withdrawal in cases of suspected gastrinoma, and published protocols from expert centres should be followed.[16,19] [5, C].

Given the above-mentioned problems in the classic diagnosis of gastrinoma[20] and the advent of highly sensitive imaging techniques, we propose an alternative diagnostic algorithm for gastrinoma, which reflects contemporary clinical practice in most expert centres. In patients with suggestive symptoms of PUD, GERD and/or PPI-responsive diarrhoea in combination with elevated FSG levels, in the absence of alternative diagnoses of elevated FSG levels (see above), a diagnostic work-up including OGD with endoscopic EUS, CT/MRI and somatostatin receptor imaging is advised [5, C]. On OGD, the detection of prominent gastric folds and a gastric pH ≤2 can be supportive for the diagnosis, while alternative diagnoses for symptoms and/or hypergastrinaemia can be ruled out. In cases

13652826, 2023, 8, Downloaded from https://onlinelibrary.wiley.com/doi/10.1111/jne.13318, Wiley Online Library on [13/08/2025]. See the Terms and Conditions (https://onlinelibrary.wiley.com/terms-and-conditions) on Wiley Online Library for rules of use; OA articles are governed by the applicable Creative Commons License

TABLE 4 Clinical and biochemical characteristics in patients with non-diabetic hypoglycaemia.

Time of Symptoms	Glucose (mmol/L)	C-peptide (nmol/L)	Insulin (pmol/L)	Pro-Insulin (pmol/L)	BHOB (mmol/L)	Δ Glucose after glucagon	Additional parameters	Diagnosis
No symptoms	<2.5	<0.2	<20.8	<5	>2.7	<+1.4	No	Normal
Mainly fasting hypoglycaemia	<2.5	>0.2	>20.8	>5	<2.7	>+1.4		Insulinoma
Postprandial hypoglycaemia	<2.5	>0.2	>20.8	>5	<2.7	>+1.4	Bariatric surgery	Post-bariatric hypoglycaemia
More often postprandial hypoglycaemia	<2.5	>0.2	>20.8	>5	<2.7	>+1.4	No	NIPHS
Mainly fasting	<2.5	>0.2	>20.8	>5	<2.7	>+1.4	Insulin secretagogues +	Exogenous administration with oral compounds
Fasting	<2.5	<0.2	>>20.8	>5	<2.7	>+1.4	NA	Exogenous administration of insulin
Mainly postprandial	<2.5	>>0.2	>>20.8	>>5	>2.7	>+1.4	Anti-insulin antibodies ++	Anti-insulin antibody syndrome
Fasting	<2.5	<0.2	<20.8	<5	<2.7	>+1.4	IGF-2	Non-insulin mediated hypoglycaemia

Note: Simplified and adapted from Uptodate.
Abbreviations: BHOB, beta-hydroxy-butyrate; NIPHS, non-insulinoma pancreatogenous hypoglycaemia syndrome including islets hypertrophy and nesidioblastosis.

of detection of a duodenopancreatic (dp) lesion, biopsy or EUS-guided fine needle aspiration (FNA) with gastrin staining of the aspirate is only advised in lesions of unclear aetiology or cases with multiple endocrine neoplasia type 1 (MEN1), or metastatic spread on imaging. If a dp-NET is detected on imaging in the presence of evident symptoms and elevated FSG levels, the alternative diagnosis of gastrinoma can be made. PPI should be initiated or intensified and depending on the disease stage, surgical or medical management should be started (Figure 2, Q7–Q8). The possibility of falsely elevated FSG levels, particularly in those patients using PPI, should be strongly considered in cases with negative imaging on endoscopic EUS, CT/MRI and somatostatin receptor PET [5, D].

Recommendations:

- The presence of a gastrinoma should be evaluated in Pan-NET patients with PUD, GERD and/or PPI-responsive diarrhoea [5, A].
- The diagnosis of gastrinoma is established by the combination of symptoms, a FSG level >10x URL and a gastric fluid pH ≤2, in the absence of PPI use [3, A]. An alternative diagnosis of gastrinoma can be made by combining symptoms and elevated FSG levels with the presence of a dp-NET with gastrin expression on immunohistochemistry or positive uptake on somatostatin receptor imaging [5, D].

Q3: Which biochemical test should be performed to diagnose rare functioning syndromes (glucagonoma, VIPoma, ACTHoma, carcinoid syndrome, PTHrPoma, calcitoninoma, GHRHoma, somatostatinoma) in patients?

Besides insulinoma and gastrinoma, several rare functioning syndromes can be encountered in Pan-NET patients and should be investigated only if clinical suspicion arises (Table 3). Several of these syndromes are characterised by increased levels of peptide hormones, which physiologically respond to oral intake of nutrients. Consequently, circulating levels of these hormones should be investigated in the fasting state to diagnose these rare functioning syndromes.

The diagnosis of a glucagonoma is made by the combination of characteristic clinical features, particularly necrolytic migratory erythema of the skin, and elevated fasting serum glucagon levels. Normal fasting glucagon levels vary between 50 and 150 pg/mL, while diseases including diabetes, sepsis, pancreatitis, trauma, Cushing's syndrome and renal or liver insufficiency can stimulate circulating glucagon levels up to 500 pg/mL. A fasting plasma glucagon above 500 pg/mL and particularly above 1000 pg/mL supports the diagnosis of glucagonoma syndrome[21,22] [3, B].

When a vasoactive intestinal peptide (VIP)-producing NET or VIPoma is suspected, a fasting VIP level should be collected. Due to VIP's short half-life, a protease inhibitor like aprotinin should be added to the collecting tube. VIP levels in healthy subjects are below 20 pmol/L (70 pg/mL), whereas a VIP level above 60 nmol/L (203 pg/mL) is considered diagnostic for VIPoma[23] [3, B]. A review of

13652826, 2023, 8, Downloaded from https://onlinelibrary.wiley.com/doi/10.1111/jne.13318, Wiley Online Library on [13/08/2025]. See the Terms and Conditions (https://onlinelibrary.wiley.com/terms-and-conditions) on Wiley Online Library for rules of use; OA articles are governed by the applicable Creative Commons License

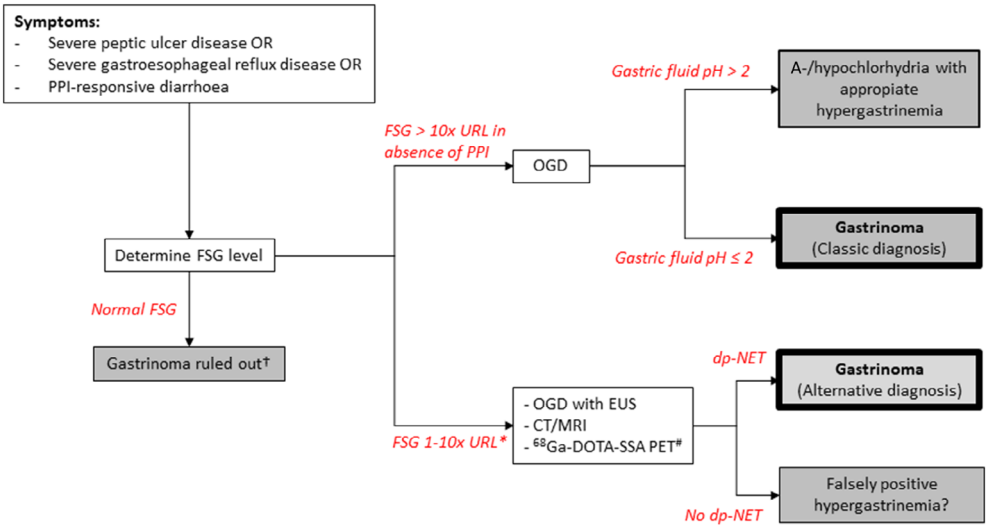

FIGURE 2 Diagnosis of gastrinoma. The classic diagnosis of gastrinoma or Zollinger Ellison syndrome is made by a combination of specific symptoms, elevated fasting gastrin levels (FSG) levels and an acidic gastric milieu, in the absence of proton pump inhibitors (PPI). In case these diagnostic criteria cannot be obtained, an alternative diagnosis of gastrinoma can be made by the combination of symptoms, elevated FSG and a dp-NET on imaging. CT, computed tomography; dp-NET, duodenopancreatic neuroendocrine tumour; EUS, endoscopic ultrasound; MRI, magnetic resonance imaging; OGD, oesophagogastroduodenoscopy; PET, positron emission tomography; SSA, somatostatin analogue; URL, upper reference limit. *Also in case of FSG >10x URL in the presence of PPI. †In rare cases with high clinical suspicion consider immature forms of gastrin or cholecystokinin. #^{64}Cu-DOTA-SSA can also be used instead of ^{68}Ga-DOTA-SSA.

52 VIPoma patients reported markedly elevated VIP levels, with a median of 188 pmol/L (range 30–2131 pmol/L)[24] [3, B]. Sampling during an asymptomatic period may lead to false negative results due to fluctuating VIP levels and should lead to re-measurement during a period of diarrhoea. Differential diagnosis of slightly elevated VIP levels includes renal insufficiency and congestive heart failure.

The reader is referred to dedicated guidelines for the diagnosis of Cushing's syndrome due to ectopic adrenocorticotrophic hormone (ACTH)[25] and carcinoid syndrome.[26] Although elevated urinary 5-HIAA levels can be detected in up to 10% of advanced Pan-NET patients, the presence of a carcinoid syndrome is exceptional, at 1% in one series.[27]

Hypercalcaemia in a Pan-NET patient should raise suspicion of primary hyperparathyroidism, which is a key feature of MEN1. However, in the absence of elevated PTH levels and bone metastases, humoral hypercalcaemia of malignancy due to ectopic PTHrP secretion should be investigated by PTHrP measurement [4, B].

The presence of watery diarrhoea has also been associated with calcitonin secretion from Pan-NET, in the absence of concomitant medullary thyroid carcinoma. In a literature review of 37 calcitonin-secreting Pan-NET cases, circulating calcitonin concentrations were on average almost 90-fold the upper limit of normal[28] [4, D].

Suspicion of acromegaly in a Pan-NET patient can be confirmed by screening serum insulin-like factor-1 (IGF-1) levels, which are 2.6–2.8 times the upper limit of normal in patients with ectopic GHRH secretion from a NET.[29] Moderate hyperprolactinaemia may also be present. Following the detection of elevated IGF-1 levels, GHRH levels should be assessed, after the addition of a protease inhibitor. GHRH levels are undetectable in healthy subjects (< 30 ng/L), whereas concentrations above 250 ng/L are diagnostic for ectopic GHRH secretion[30] [4, C]. Differential diagnosis of a GH-secreting pituitary tumour should be considered, particularly in MEN1 patients.

A somatostatinoma leading to a clinical syndrome including gallstones, diabetes mellitus and diarrhoea/steatorrhoea has been described for pancreatic, duodenal and jejunal NET.[31] Many published case reports concern NET with positive immunohistochemical expression of somatostatin rather than a functioning syndrome of multihormonal inhibitory symptoms, which has questioned the existence of a true clinical somatostatinoma syndrome.[32] Also, the cutoff of fasting plasma somatostatin levels for the diagnosis of somatostatinoma syndrome has not been clearly established or validated. Reports have suggested employing cutoffs of circulating somatostatin levels above two to three times the upper reference limit, but functioning syndromes have predominantly been described in patients with pancreatic primaries and highly elevated somatostatin levels [4, D]. Consequently, the WHO classification now states that NEN with somatostatin-positive immunohistochemistry but without symptoms of somatostatinoma syndrome should be designated as somatostatin-producing well-differentiated NEN and are not considered somatostatinomas.[33]

Recommendations:

- History taking of all Pan-NET patients should include signs and symptoms of insulinoma, gastrinoma and rare functioning syndromes [5, A].
- Biochemical tests for rare functioning syndromes should only be performed in patients with specific signs or symptoms. Blood samples should be taken according to precise protocols and results interpreted in relation to specific cutoffs [5, A].

13652826, 2023, 8, Downloaded from https://onlinelibrary.wiley.com/doi/10.1111/jne.13318, Wiley Online Library on [13/08/2025]. See the Terms and Conditions (https://onlinelibrary.wiley.com/terms-and-conditions) on Wiley Online Library for rules of use; OA articles are governed by the applicable Creative Commons License

TABLE 5 Monogenic syndromes with functioning Pan-NET.

Disease	Gene	Locus	OMIM	Inheritance	Functioning Pan-NET frequency	Most frequent functioning Pan-NET types
MEN1	*MEN1*	11q13.1	613,733	AD	30%–80%	Gastrinoma, insulinoma
MEN4	*CDKN1B*	12p13.1	600,778	AD	8%	Gastrinoma
NF1	*NF1*	17q11.2	613,113	AD	<2%	Insulinoma, somatostatinoma
TSC	*TSC1/ TSC2*	9q34.13/16p13.3	605,284/ 191,092	AD	1%–2%	Insulinoma

Abbreviations: AD, autosomal dominant; MEN1, multiple endocrine neoplasia, type 1; MEN4, multiple endocrine neoplasia, type 4; NF1, neurofibromatosis, type 1; Pan-NET, pancreatic neuroendocrine tumours; TSC, tuberous sclerosis complex.

Q4: Which patients with functioning pancreatic NET syndromes should be referred for genetic counselling?

Pan-NET are inherited in approximately 17% of cases and can present in the context of monogenic familial endocrine tumour syndromes[34] [2, A]. Generally, the hallmarks of these conditions include multiple primary tumours in multiple organs, early onset (< 40 years) and characteristic inheritance patterns and should prompt clinicians to search for other non-Pan-NET signs of hereditary syndromes. Therefore, it is crucial to take a detailed medical and personal family history in every patient presenting with a functioning Pan-NET. The syndromes associated with Pan-NET include MEN1, multiple endocrine neoplasia type 4 (MEN4), neurofibromatosis type 1 (NF1), and tuberous sclerosis (TSC) 1 and 2, see Table 5. Pan-NET also occur in up to 10% of patients with Von Hippel Lindau (VHL) disease and in 100% of Mahvash disease, but these tumours are not associated with clinical functioning syndromes.[35,36] The genetic syndromes associated with functioning Pan-NET are usually highly penetrant with variable expressivity. All are autosomal dominant (AD) conditions. Patients with functioning Pan-NET and a history and/or symptoms of any of the associated syndromes should be referred to a clinical geneticist for evaluation.

MEN1/MEN4

Multiple Pan-NET are typical in MEN1, a rare AD highly penetrant tumour syndrome caused by heterozygous damaging variants in the *MEN1* gene. MEN1-related phenotype is characterised by primary hyperparathyroidism, anterior pituitary tumours, Pan-NET, lung and thymic NET, adrenocortical tumours, breast cancer and dermatological signs (angiofibroma, lipoma, collagenoma), respectively. Pan-NET can be detected in up to 80% of MEN1 patients with a cumulative incidence increasing with age.[37] Most Pan-NET are non-functioning. Functioning Pan-NET within the spectrum of MEN1 include insulinoma (10%), glucagonoma (<1%), somatostatinoma (1%), and VIPoma (<1%). The vast majority of MEN1-associated gastrinomas are found in the duodenum. Suspicion of MEN1 should be considered in patients with typical MEN1 features and young age of onset (<30 years)[38] [2, A].

The diagnosis of MEN1 requires the presence of at least two of the three endocrine tumours or a damaging alteration of the *MEN1* gene. In familial cases with phenotypic MEN1 but with no *MEN1* damaging variants, MEN4 should be suspected. This is a very rare AD multiendocrine tumour predisposing syndrome caused by pathogenic variants in the *CDKN1B* gene, encoding for cyclin-dependent kinase inhibitor 1b, p27. It is characterised by primary hyperparathyroidism, pituitary and gastroenteropancreatic NENs, including dp-NET. Among the nine dp-NET cases described so far, most were NF-Pan-NET and the remaining three were duodenal gastrinomas[39] [4, D].

Neurofibromatosis type 1

Insulinoma and somatostatinoma rarely occur in NF1, with eight descriptions to date.[40] NF1 is an AD full penetrant neurocutaneous disease, which is caused by an inactivating germline alteration of the *NF1* gene on chromosome 17q11.2 [2, A]. Mutations arise de novo in about 50% of patients. NF1-related phenotype is characterised by multiple café-au-lait spots, axillary freckling, cutaneous and plexiform neurofibromas, bilateral Lisch nodules, optic gliomas, bony alterations, and neurofibromas. Functioning Pan-NET are rare in NF1. In patients with pancreatic insulinoma or somatostatinoma, NF1 can be suspected if they also present at least two typical clinical features of the disease or one clinical feature and at least one a first-degree relative with NF1[41] [2, A].

Tuberous Sclerosis Complex

Pan-NET are an uncommon finding in TSC, but their frequency is higher in these patients than in general population. TSC, a tumour predisposing syndrome characterised by the development of hamartomas, benign tumours, and, rarely, malignant tumours, is caused by a germline damaging variants in *TSC1* or *TSC2* genes. In the minority of TSC-associated Pan-NET that are accompanied by a hormonal syndrome, insulinoma was the predominant type[42] [4, D].

Monogenic Pan-NET molecular analysis

Damaging alterations in all discussed genes can be nucleotide substitutions, small nucleotide deletion/insertion, and, although less frequently, also gross exonic and multiexonic rearrangements. Thus, molecular testing for MEN1, MEN4, NF1 and TSC should include sequencing analysis (preferably next-generation sequencing) followed by a quantitative assay (such as multiple ligation-dependent probe amplification).

13652826, 2023, 8, Downloaded from https://onlinelibrary.wiley.com/doi/10.1111/jne.13318, Wiley Online Library on [13/08/2025]. See the Terms and Conditions (https://onlinelibrary.wiley.com/terms-and-conditions) on Wiley Online Library for rules of use; OA articles are governed by the applicable Creative Commons License

Recommendations:

- History taking in patients with a functioning Pan-NET syndrome should include the presence of hereditary endocrine disease in patients as well as in family members [5, A].
- Patients with functioning Pan-NET and a family history and/or symptoms of any of the associated syndromes should be referred to a clinical geneticist for evaluation [2, A].

Q5: What is the difference in the imaging work-up of functioning Pan-NET as compared to non-functioning Pan-NET?

Cross-sectional imaging and EUS

The diagnostic work-up of a functioning Pan-NET is not significantly different as compared to that of a NF-Pan-NET, with the exception of insulinoma[43] [4, B]. The principal challenge lies in the localisation of the functioning NET. Functioning Pan-NET are generally imaged earlier in the disease stage compared to their non-functioning counterparts. Lesions are therefore smaller, with a typical pattern of NET. Multiphasic contrast-enhanced CT imaging including early arterial phase is required to depict and characterise these typically small hypervascularised lesions. The sensitivity of CT for the detection of small functioning tumours is high during the arterial phase (83%–88%) and is lower during the portal venous phase (11%–76%).[44] On CT, insulinomas and gastrinomas are often small rounded lesions with marked homogeneous hyperenhancement in the arterial phase, without stenosis of the main pancreatic duct.[45] Gastrinomas are mainly located in the gastrinoma triangle, either in the pancreas parenchyma or in the duodenum. Every enhancing nodule must be reported as they could be a functioning lesion. On the contrary, insulinomas are generally solitary. The sensitivity of thin-section arterial phase CT for their detection is 94%; the overall diagnostic sensitivity for combined biphasic thin-section helical CT and endoscopic ultrasound (EUS) has been reported to be 100%.[46] One infrequent but specific lesion is the somatostatinoma of Vater's ampulla, associated with NF1, appearing as a nodular lesion of Vater's ampulla.[47] With MRI, Pan-NETs are usually positive on diffusion-weighted imaging, hypointense on T1 and moderately hyperintense on T2. EUS shows a high sensitivity of roughly 87%, a specificity of 98%, and allows FNA biopsy/cytology, also for immunohistochemical staining of hormones for culprit lesions.[48] EUS can detect lesions as small as 2–5 mm. Importantly, functional activity of subcentimetre lesions is exceedingly rare outside of insulinoma or gastrinoma. However, lesions located in the pancreatic tail may be overlooked by EUS, which is operator dependent. EUS and MRCP can provide the distance of the Pan-NET to the main pancreatic duct, which is crucial information for the possibility of performing an enucleation [3, A].

Functional imaging

Somatostatin receptor targeting radioligands such as ^{68}Ga-DOTA-SSA or ^{64}Cu-DOTA-SSA have high sensitivity but have a limited role in differentiating between functioning and NF-Pan-NET. Glucagon-like peptide-1 receptors (GLP-1R) are overexpressed in 93% of localised insulinomas.[49] Several studies have demonstrated the superiority of GLP-1R PET/CT or PET/MRI for the detection of insulinoma as well as nesidioblastosis foci in comparison to contrast-enhanced CT, MRI and somatostatin receptor imaging[50] [3, B]. On the other hand, GLP-1R is overexpressed only in 36% of patients with metastatic insulinoma, making GLP-1R PET less sensitive for diagnosing these malignant lesions. In the absence of GLP-1R imaging, ^{68}Ga-DOTA-SSA or ^{18}F-DOPA PET can be used, although ^{68}Ga-DOTA-SSA is superior to ^{18}F-DOPA[51,52] [3, B].

Venous sampling

In rare cases of biochemical diagnosis of insulinoma and negative (functional) imaging arterial calcium stimulation with hepatic venous sampling can help to localise the insulinoma. In a meta-analysis of 10 studies with 337 patients, the sensitivity and specificity of calcium-stimulated venous insulin sampling were 93% and 86%, respectively.[53] It has to be mentioned that as a result of the calcium stimulation test only the territory of the corresponding artery can be defined, not necessarily the tumour itself. These investigations should be confined to expert centres [4, B].

Recommendations:

- Similar to NF-Pan-NET, imaging of patients with functioning Pan-NET syndromes should include cross-sectional imaging with CT or MRI and ^{68}Ga-DOTA-SSA or ^{64}Cu-DOTA-SSA PET/CT [4, B].
- EUS can be helpful for the detection of small insulinomas and gastrinomas as well as to define the tumour location in relation to the pancreatic duct, if minimally invasive enucleation is considered [3, A].
- GLP-1R PET/CT or calcium-stimulated sampling are advised in cases of insulinoma with negative imaging [4, B].

Q6: What is the appropriate surgical management of localised insulinoma?

Locoregional therapy of localised insulinoma comprises different management approaches, ranging from surgery to endoscopy and interventional radiology. The treatment of localised insulinoma differs from that of localised NF-Pan-NET, mainly due to a more benign biological behaviour and consequently a lower risk of nodal

13652826, 2023, 8, Downloaded from https://onlinelibrary.wiley.com/doi/10.1111/jne.13318, Wiley Online Library on [13/08/2025]. See the Terms and Conditions (https://onlinelibrary.wiley.com/terms-and-conditions) on Wiley Online Library for rules of use; OA articles are governed by the applicable Creative Commons License

and distant metastases. As distinct from asymptomatic patients with NF-Pan-NET ≤2 cm, active surveillance is not appropriate for patients with insulinomas due to the presence of functioning symptoms.

Surgical approach

Surgical resection is the gold standard treatment for localised insulinomas. Parenchyma-sparing pancreatic resections should be proposed as first-line surgical strategy, when technically feasible[54] [2b, A]. Since the risk of nodal metastases is low, a formal lymphadenectomy is not routinely required [2b, A]. Nodal sampling might be performed in order to decrease the risk of tumour understaging[55] [2b, B]. Tumour size, location, and relationship with the main pancreatic duct (MPD) should guide the surgical decision-making in patients with benign insulinomas. Enucleation can be proposed to patients with insulinomas smaller than 2–3 cm and located at ≥3 mm from the MPD[56] [2b, A]. Central pancreatectomy represents a valuable option for patients with insulinomas located in the pancreatic neck, when enucleation is not feasible, and the remaining parenchyma is enough to guarantee a relevant pancreatic function. The main advantage of parenchyma-sparing over formal resections is represented by the excellent long-term functional outcomes. On the other hand, a major challenge is still represented by the high morbidity rate, mainly related to the risk of pancreatic fistula. Regarding the surgical approach, several studies and meta-analyses have reported that laparoscopic procedures are safe and effective treatment options for patients with Pan-NET, including insulinomas[56,57] [2a, B]. Therefore, a minimally invasive approach should be always considered, when technically feasible, for patients with preoperatively localised insulinomas [2a, A]. On the other hand, open surgery with intraoperative ultrasound is required when insulinomas are not localised preoperatively.

Other approaches

Combined endoscopic and radiological management of insulinomas has been recently investigated. EUS-guided radiofrequency ablation (EUS-RFA) is a novel technique able to induce necrosis of small pancreatic lesions. EUS-RFA seems a safe and effective treatment option for small (≤2 cm) localised insulinomas, especially in patients considered unfit for surgery. In this regard, recent retrospective series and meta-analyses have shown a high clinical success rate (86%–96%), reporting only minor treatment-related adverse events[58,59] [2a, C]. However, further data in terms of long-term survival and recurrence rate are needed before proposing this procedure routinely in patients with small insulinomas, and these interventions should be confined to expert centres.

Recommendations:

- Parenchyma-sparing pancreatic resections, including enucleation and central pancreatectomy, should be proposed as a first-line surgical strategy in patients with insulinoma [2b, A].
- A minimally invasive approach should be always considered, when technically feasible, for patients with preoperatively localised insulinomas [2a, A].
- EUS-RFA might be considered as treatment option in patients with small (≤2 cm) localised insulinomas considered as unfit for surgery [2a, C].

Q7: What is the appropriate surgical management of localised gastrinoma?

The treatment of localised gastrinoma causing ZES differs from that of localised NF-Pan-NET for several reasons. First, gastrinomas might develop either in the duodenum (60%–70%), the pancreas (20%–30%) or potentially in the lymph nodes (about 10%–20%).[60] The presence of primary lymph node gastrinomas, however, is controversial, since it remains unclear whether they represent metastatic disease from a yet unidentified primary tumour or a de novo occurrence of a primary tumour in a lymph node.[61] Second, even very small (<5 mm) gastrinomas have a high risk for nodal metastases of approximately 80%[60,62,63] (EL3). Third, about 20%–30% of gastrinomas are associated with MEN1, which arise almost exclusively in the duodenum and are often multiple.[63,64] Therefore, indication and type of surgery for localised gastrinomas are more complex, with more open questions compared to NF-Pan-NET and other functioning Pan-NET.

Surgical approach in sporadic gastrinoma

Surgical resection represents the gold standard treatment for preoperatively identified localised sporadic gastrinomas, either duodenal or pancreatic, independent of size[65] [3, A]. It has been shown that patients with sporadic ZES and negative preoperative imaging also benefit from surgical exploration with curative intent[66] [3, B]. Regardless of the type of dp procedure, it is always mandatory to perform a systematic peripancreatic lymphadenectomy during every operation for ZES, since it has been demonstrated that nodal dissection reduces the rate of ZES persistence and improves survival [3, A].[67,68]

In sporadic duodenal gastrinomas, it remains unclear whether a duodenotomy with local excision or a partial pancreaticoduodenectomy (PPD) is the optimal procedure to provide long-term cure. Previous retrospective studies on non-metastatic sporadic gastrinomas favoured duodenotomy with lymphadenectomy compared to PPD, since there was no significant difference in survival outcomes but a lower complication rate after duodenotomy[67,69] [3, B]. Only very few case reports

13652826, 2023, 8, Downloaded from https://onlinelibrary.wiley.com/doi/10.1111/jne.13318, Wiley Online Library on [13/08/2025]. See the Terms and Conditions (https://onlinelibrary.wiley.com/terms-and-conditions) on Wiley Online Library for rules of use; OA articles are governed by the applicable Creative Commons License

exist regarding a laparoscopic approach, and it is not recommended, since the capability of detecting the small submucosal gastrinomas by palpation is very limited in cases of duodenotomy [5, A].

In cases of sporadic pancreatic gastrinomas, most experts propose formal pancreatic resections with lymphadenectomy as procedure of choice for all pancreatic gastrinomas [5, B]. Laparoscopic/robotic procedures are safe and effective treatment options for selected patients with preoperatively localised pancreatic gastrinoma[70] [2, A].

A prospective study with long-term follow-up revealed that a significant proportion (30%–40%) of patients with sporadic ZES will develop resectable persistent or recurrent disease after an initial operation. These patients generally have prolonged survival after reoperation and 25% of them can be cured with repeat surgery. Thus, all ZES patients should have systematic postoperative imaging, and, if a localised visible tumour recurs, reoperation is recommended[69] [2, A]. It is advised to continue PPI therapy for at least 3–6 months after resection with curative intent due to the continued risk of GERD complications due to the parietal cell mass.

Other approaches

In patients with increased surgical risk due to relevant comorbidities or advanced age, medical therapy with high-dose PPI with or without SSA (see below) can be considered to control gastrinoma symptoms and growth [5, A]. In contrast to insulinoma and NF-Pan-NET EUS-RFA for localised pancreatic gastrinomas has been poorly investigated with only very few cases described.[71] The success rate was limited to 50%, probably due to the high rate of nodal metastases [4, C]. Thus, this procedure is not recommended for patients with small pancreatic gastrinomas outside clinical studies. EUS-RFA should not be performed in duodenal gastrinomas because of the risk of perforation [5, A].

MEN1-associated gastrinoma

The indication and the timing of surgery in MEN1-ZES are controversial, since it has been shown that patients with no imageable pancreatic tumour, who did not undergo surgery, have a good prognosis with 5-year survival rates around 90% and a 10 year survival rate of 54% in cases of disseminated distant metastases[72] [3]. One has to keep in mind that patients with MEN1-ZES always have small duodenal gastrinomas and almost never pancreatic gastrinomas, as demonstrated by pathological studies[60] [2, A]. In addition, up to 85% of MEN1 gastrinomas are metastatic at the time of diagnosis, as shown by the presence of nodal and/or liver metastases, although the primary tumours might be microgastrinomas as small as 1 to 2 mm[60,62] [2]. The presence of an imageable pancreatic lesion >20 mm in MEN1-ZES, although most likely not representing the functioning culprit lesion, may still be a useful surrogate parameter to indicate surgery, based on the good long-term survival in this setting of up to 100% at 10 years[64,65,72] [2b, A]. Some groups, however, favour surgery at the time of biochemical evidence of ZES, since this approach provided long-term cure rates of 60%–80% in a small case series[63,73] [3, B]. Finally, the ameliorating effect of parathyroidectomy should be considered in coincident cases of primary hyperparathyroidism, as calcium stimulates gastrin release.

The optimal surgical procedure is also controversial. Surgical strategies comprise local excision via duodenotomy with or without distal pancreatic resection, dependent on the presence of NF-Pan-NET, regional lymphadenectomy, as well as PPD. At present, the most common procedure for MEN1-related ZES is duodenotomy with excision of duodenal wall tumours, enucleation of pancreatic head lesions, systematic lymphadenectomy with or without distal pancreatectomy according to the presence of other Pan-NET in the pancreatic body/tail[38,69] [3]. These procedures provide a biochemical cure of only 30%

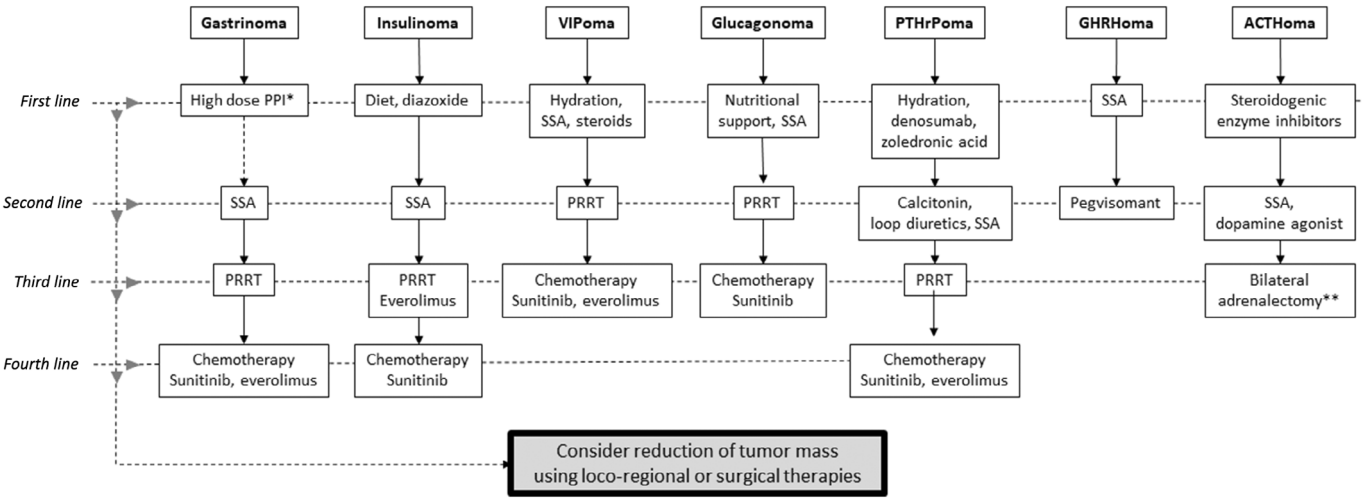

FIGURE 3 Treatment of hormonal symptoms of functioning Pan-NET syndromes in advanced disease. Management of patients with functioning syndromes includes a multimodal approach. First-line treatment should be initiated in all patients with symptoms and advanced disease as monotherapy or combination treatment. In case of refractory symptoms further lines of treatment should be explored until clinical benefit, also taking into account the need for antiproliferative control or cytoreduction based on tumour growth rate and bulk. *Almost all cases of gastrinoma can be clinically controlled with high dose PPI. **In aggressive cases bilateral adrenalectomy should be considered the first-line option of choice. PPI, proton-pump inhibitor; PRRT, peptide receptor radionuclide therapy; SSA, somatostatin analogues.

13652826, 2023, 8, Downloaded from https://onlinelibrary.wiley.com/doi/10.1111/jne.13318, Wiley Online Library on [13/08/2025]. See the Terms and Conditions (https://onlinelibrary.wiley.com/terms-and-conditions) on Wiley Online Library for rules of use; OA articles are governed by the applicable Creative Commons License

of cases after 5 years[69,73–75] [3] compared to PPD resections with a chance of biochemical cure of 60%–80% after 10 years[63,73] [3, A]. One major argument against PPD is represented by the potential perioperative and long-term morbidity [3]. However, recent retrospective cohort studies have shown that neither perioperative and long-term complications nor the quality of life are significantly different between patients undergoing PPD resections and non-PPD resections, if surgery is performed in an expert centre[73,76] [3]. At present, the timing and type of surgery for MEN1-related ZES should be individualised according to patient's characteristics (e.g., age, comorbidities, pre-existing insulin-dependent diabetes) and preferences.

Based on the very limited data, it is recommended that the indication for re-exploration in MEN1-related ZES should be considered with caution, especially because the symptoms can be well controlled with medical treatment and long-term survival in the absence of distant metastases is excellent. The eventual surgical procedure should be individualised according to preoperative findings, previous duodenopancreatic resections, the patient's history (e.g., age, pre-existing insulin-dependent diabetes), and preference[77,78] [3, A].

Recommendations:

- The treatment of choice for sporadic gastrinoma without disseminated disease is resection of the primary with systematic lymphadenectomy [3, A].
- Any operation for sporadic or MEN1-associated duodenal ZES should include an exploration of the duodenum via duodenotomy with excision of duodenal or even resection of the duodenum combined with systematic lymphadenectomy to provide a chance to cure hypergastrinemia and to reduce the risk of distant metastatic disease [2b, A].
- The higher chance of cure when performing a pancreaticoduodenectomy resection in MEN1-ZES should be discussed with the patient in terms of benefits and risks [3, A].

Q8: What is the appropriate management of patients with advanced disease and functioning pancreatic NET syndromes?

The management of functioning Pan-NET syndromes in patients with advanced disease, that is, unresectable or metastatic, requires a multimodal approach consisting of supportive, medical, interventional and surgical treatment. For patients awaiting potentially curative resection of their Pan-NET some of these strategies can also be employed until the date of surgery (Figure 3). This section focuses primarily on the management of the hormonal symptoms in patients with advanced Pan-NET, whereas the oncological treatment of advanced Pan-NET is discussed in the ENETS 2023 guidance paper for NF-Pan-NET.

The functioning syndrome should be analysed together with all patient and tumour characteristics, as several therapeutic strategies affect both the hormonal as well as the proliferative potential of Pan-NET. Strategies that result in a reduction of tumour bulk generally also significantly reduce patient hormonal symptoms. Cytoreductive surgery should be considered with the aim of reducing tumour burden, thus allowing better symptom control with medical treatment. Before local treatment of NET liver metastases, a liver MRI, with diffusion-weighted sequences and hepatocyte-specific contrast agent, is recommended as the most sensitive tool to depict small (and large) lesions.[79] Mayo et al. showed that patients with hormonally-functioning liver metastases are those who benefit the most, in terms of both symptoms and survival, from liver-directed surgery.[80] In general, cytoreductive surgery can be considered for patients with functioning tumours when ≥70%–90% of visible disease can be debulked and the remaining liver function is adequate[81] [2b, B]. Percutaneous ablation by, for example, radiofrequency ablation (RFA) can be performed in combination with surgical resection, allowing the treatment of isolated metastases and leading to better symptomatic control[82] [2b, B].

If the disease is predominantly located in the liver, transarterial bland, chemo- or radioembolisation could be a treatment option in cases of uncontrolled functioning syndrome despite optimal medical therapy [2b, B].[83] Because of the high morbidity risk associated with this technique in cases of high metastatic load in the liver, the indication must be confirmed in a NET-dedicated multidisciplinary team attended by an interventional radiologist. To reduce morbidity, targeted treatment to separate sections of the liver can be done in separate sessions 4–8 weeks apart. Chemoembolisation may be more effective than bland embolisation in metastatic Pan-NET.[83,84] Chemoembolisation is generally performed (under general anaesthesia) using streptozotocin, doxorubicin or adriamycin. Liver failure constitutes an absolute contraindication for (chemo)-embolisation, while portal vein thrombosis is a relative contraindication.

The evidence supporting the use of systemic treatments is not impacted by the presence or absence of functioning syndromes, since most trials recruited patients with Pan-NET regardless of their functioning status. However, general principles should be taken into account, mainly in the form of the expected toxicity profile of some of these treatment options, which may be of special relevance to the functioning syndromes. For several functioning syndromes, if supportive or surgical measures are insufficient to control the hormonal symptoms, a trial of somatostatin analogues (SSA) can be tried to reduce functioning activity. SSA were first developed as antisecretory agents and have positive effects on NET-associated hormonal complaints when somatostatin receptors (SST_1-SST_5) are expressed by the tumours. Another advantage is the possibility to increase the dose or shorten the interval of administration in cases of clinical recurrence on standard doses. Systemic treatment with chemotherapy or peptide receptor radionuclide therapy (PRRT) plays a key role for selected patients for both control of tumour growth and hormonal symptoms. One of the most commonly used chemotherapy regimens is capecitabine associated with temozolomide which had a response rate of 40% in grade 1–2 Pan-NET in a prospective, multicentre, randomised phase II trial.[85] This treatment can also be effective in well-differentiated grade 3 Pan-NET. As an alternative, streptozotocin-based chemotherapy has been used for nearly 50 years in the treatment of functioning Pan-NET. Concomitant therapy with SSA can increase the rate of overall syndromic symptom control.

13652826, 2023, 8, Downloaded from https://onlinelibrary.wiley.com/doi/10.1111/jne.13318, Wiley Online Library on [13/08/2025]. See the Terms and Conditions (https://onlinelibrary.wiley.com/terms-and-conditions) on Wiley Online Library for rules of use; OA articles are governed by the applicable Creative Commons License

Insulinoma

In the control of insulinoma-related hypoglycaemia, fractioned diet including complex carbohydrates with slow absorption is the cornerstone to avoid prolonged fasting [5, A]. Simple carbohydrates as well as glucose infusion are required in hypoglycaemic events. First-line medical therapy for advanced insulinoma consists of diazoxide (50–600 mg daily). In cases of refractory hypoglycaemia, incidental descriptions also support the use of glucocorticoids, verapamil, and diphenylhydantoin [5, D].

A CGMS could be a very useful tool in patients with insulinoma to early recognise a hypoglycaemic event and prevent severe complications. Furthermore, it is also possible to connect an infusion pump automatically administering glucose as required. This is of special relevance in cases of unawareness of hypoglycaemia when autonomic symptoms are missing[86] [5. C]. To manage acute episodes of hypoglycaemia, glucagon therapy is now available in different formulations (intramuscular, subcutaneous, intranasal). The intranasal spray formulation is easily administered and rapidly effective in patients with severe hypoglycaemic events, especially when an intravenous glucose infusion is not available[87] [5, C].

SSA can reduce insulin levels and prevent hypoglycaemic episodes in patients with advanced insulinomas.[88] On top of this, SSA are the first-line choice for antiproliferative control in Pan-NET with Ki67 index below 10% and limited tumour bulk.[89] As SSA also decrease glucagon secretion and SSTR expression can be limited in insulinomas, which could paradoxically aggravate hypoglycaemia, a trial with short-acting octreotide under close monitoring of glucose levels is advised [5, D]. After demonstration of a positive effect on glucose levels, long-acting release (LAR) octreotide or lanreotide can be initiated. In cases with advanced insulinoma with hypoglycaemia refractory to octreotide or lanreotide, the pan-somatostatin receptor-targeting pasireotide can be tried off-label. Improvement of hypoglycaemia was observed in several case reports after the start of pasireotide[90] [4, D].

In a multicentric retrospective study including 31 patients with metastatic insulinoma, PRRT was performed in 14 patients, 13 of whom (92.8%) had complete or partial control of hypoglycaemia syndrome[91] [4, C]. In another single centre series, symptomatic response to PRRT in terms of hypoglycaemia was observed in six out of nine patients with malignant insulinoma.[92] Everolimus is registered for progressive advanced Pan-NET and decreases insulin secretion and action. In a retrospective, multicentre series 11 out of 12 patients demonstrated swift disappearance of hypoglycaemic symptoms with a median symptom-free period of 6.5 months, although tolerance was limited.[93] Consequently, both PRRT with ^{177}Lu-DOTATATE and everolimus can be considered in advanced insulinoma cases with hypoglycaemia refractory to SSA, especially in those cases with concurrent progressive disease [4, C]. Historically, streptozotocin is well-known for its diabetogenic effects, making it a suitable alternative for high grade or clinically aggressive insulinomas.

Radioembolisation together with chemoembolisation recently proved to be highly effective in controlling hypoglycaemia in a series of seven patients with malignant insulinoma, resulting in an initial clinical success rate of 100% and in an overall clinical success rate of 85%[94] [4, D].

Gastrinoma

The control of gastric acid hypersecretion is optimally achieved by using PPIs [3, A]. Long-acting PPIs such as omeprazole 60 mg a day or equivalent dose of lansoprazole, esomeprazole, pantoprazole, rabeprazole, dexpansoprazole, once or twice a day, are durably effective in patients with sporadic gastrinoma without evidence of tachyphylaxis. Patients with MEN1-related gastrinoma may require a daily dose of 80–120 mg of omeprazole. Vitamin B12 deficiency, hypomagnesaemia as well as the risk of bone fractures should be monitored in NET patients on long-term PPIs. H2 blockers are also effective but much less employed because of their lower activity and need for very high doses.

SSA are also effective to control gastrin hypersecretion and the consequent gastric acid hypersecretion, but they are generally not used for this purpose if no antitumour activity is required, due to the high efficacy of PPIs. In a retrospective study, among 12 patients with gastrinoma under treatment with standard doses of octreotide and lanreotide, all but one achieved a complete clinical control with SSA, even when not controlled by PPI therapy at baseline[95] [4]. In a prospective observational study on MEN1 patients with Pan-NET less than 2 cm, those treated with lanreotide neither developed a gastrinoma nor other functioning syndromes during a 6-year follow-up.[96]

In patients with gastrinoma treated with ^{90}Y-DOTATOC alone or in combination with ^{177}Lu-DOTATATE clinical response and objective response rates were observed in 16% and 30% of cases, respectively.[97] Among patients with functioning Pan-NET that had undergone PRRT with ^{177}Lu-DOTATATE, two of three with symptomatic gastrinoma experienced a decrease of pyrosis or diarrhoea[92] [4]. The symptomatic control paralleled that of tumour shrinkage and decrease of hormonal secretion, but it was also observed in some patients with stable/progressive disease. The timing of the response was also in favour of PRRT, as the symptomatic response preceded tumour response and frequently persisted after tumour progression. Importantly, for all functioning Pan-NET, functioning symptom deterioration due to release of hormone during PRRT or immediately afterwards occurred in 9% of patients and it warrants careful patient monitoring and preventive management strategies. It is advised to keep the SSA-free period before the start of PRRT as short as possible, with safe reintroduction of SSA 1 h after the infusion of ^{177}Lu-DOTATATE.

13652826, 2023, 8, Downloaded from https://onlinelibrary.wiley.com/doi/10.1111/jne.13318, Wiley Online Library on [13/08/2025]. See the Terms and Conditions (https://onlinelibrary.wiley.com/terms-and-conditions) on Wiley Online Library for rules of use; OA articles are governed by the applicable Creative Commons License

Rare functioning Pan-NET syndromes

The treatment of symptoms in glucagonoma is based on SSA, which are effective in the majority of advanced glucagonomas regardless of the antitumour activity.[98] Amino acid infusion as well as zinc therapy have been suggested to improve skin lesions of necrolytic migratory erythema[99] [4, D]. Due to its effects on glucose levels, everolimus should be used with caution in patients with glucagonoma with careful monitoring of glucose levels. Early symptomatic responses to PRRT were observed in five of seven (71%) patients with uncontrolled glucagonoma syndrome, and no hormonal crisis was observed in this series[92] [4, D].

Diarrhoea in VIPoma can be debilitating and life-threatening. Resuscitation with intravenous fluids and electrolytes is warranted in severe cases. VIPomas are also sensitive to SSA treatment, making it first choice for preoperative stabilisation and in advanced disease [4, D]. In a retrospective multicentre French series, SSA alone improved VIPoma-associated symptoms in nine out of 11 patients,[100] whereas SSA controlled hormonal symptoms in 24 out of 24 cases reported in the Chinese literature.[101] Alternatively, glucocorticoids have historically been shown to reduce diarrhoea in VIPoma patients.[102] In a French study, VIPoma-associated diarrhoea was controlled in 10 out of 12 patients receiving chemotherapy and in all four patients receiving sunitinib. In an English series, chemotherapy and sunitinib were only effective in controlling VIPoma symptoms in two out of five and two out of six patients, respectively. When combined, two series have shown that PRRT led to improvement of VIPoma symptoms in nine out of 11 patients.[92,103] Together, these limited retrospective data make chemotherapy, sunitinib and PRRT second-line options to be considered in patients with refractory advanced VIPoma, especially in cases of disease progression [4, D].

Acromegaly due to ectopic GHRH secretion, similarly to acromegaly caused by a GH-secreting pituitary tumour, responds favourably to SSA,[104,105] making them the first-line choice [3, B]. In cases of continued IGF-1 elevation, pegvisomant can be added to control the acromegaly effects [4, D]. First-line treatment of Cushing's syndrome due to ACTH-secreting Pan-NET is represented by steroidogenic enzyme inhibitors, such as metyrapone, osilodrostat or ketoconazole [4, B]. Alternatively, positive clinical responses to SSA and dopamine agonists have been described and these treatments might be considered as second-line options.[106] Severe cases of Cushing's syndrome constitute endocrine emergencies and should prompt consideration of bilateral adrenalectomy in an experienced multidisciplinary team [4, B].

Medical management of the carcinoid syndrome associated with Pan-NET is similar to that in patients with midgut or bronchial NET.[26] SSA have been shown to exert antihormonal effects in case reports and small series of patients with hypercalcemia due to PTHrP production,[107] hypercalcitoninaemia[108] and even somatostatinoma[109] [4, C]. In PTHrP-hypersecreting Pan-NET, supportive therapy includes hyperhydration with oral and/or intravenous fluids, denosumab and zoledronic acid.[110] Calcitonin and loop diuretics constitute second-line options for refractory humoral hypercalcemia of malignancy [4, C].

Recommendations:

- Management of each functioning Pan-NET syndrome in patients with advanced disease requires a tailored multimodal approach of supportive, surgical, interventional, hormonal and antiproliferative therapies [5, A].
- Strategies that result in a reduction of tumour bulk generally also significantly reduce patient hormonal symptoms [2b, B]. Cytoreductive surgery can be considered for patients with functioning tumours when ≥70%–90% of visible disease can be debulked. Alternative locoregional therapies include RFA and transarterial bland, chemo- or radioembolisation [2b, B].
- When dedicated supportive therapy for a functioning Pan-NET syndrome is insufficient, palliative SSA treatment can be initiated. PRRT, chemotherapy, everolimus or sunitinib should generally be reserved for SSA-refractory cases [4, B].

Q9: What is the recommended follow-up in functioning Pan-NET syndromes after curative resection?

In several earlier studies, patients with functioning tumours postoperatively displayed a better prognosis than NF-Pan-NET. This is believed to be related to the fact that NF-Pan-NET are usually larger at diagnosis as they do not have hormonal symptoms and are consequently discovered later. However, a recent study from the SEER database, including 2571 resected patients, contradicts this point, reporting no difference in terms of OS and cancer-specific survival.[111]

Insulinoma, if localised, radically operated and without signs of malignancy nor grade 3 only need a single follow-up after 3–6 months [5, A]. If a patient's symptoms have resolved no further follow-up is needed, although the patient should be instructed to seek medical attention upon recurrence of symptoms of hypoglycaemia.

For other functioning syndromes that usually have more malignant potential the frequency of follow-up is every 3–6-12 months, similar to NF-Pan-NET [5, B]. The interval is dependent on the tumour grade, bulk and growth rate as well as current therapy. A more frequent follow-up is needed in patients with refractory symptoms of functioning syndromes. The type and interval of radiological follow-up is independent of functioning syndromes. On the other hand, specific hormones such as glucagon, gastrin, ACTH, VIP etc. should be measured at each follow-up in patients with functioning Pan-NET. Any evidence of recurrence and aggravation of hormonal symptoms should prompt immediate clinical and biochemical re-evaluation. One should also keep in mind that patients can present with an additional syndrome or switch hormonal profile during their lifetime, underlining the importance of appropriate history-taking.[4,5]

13652826, 2023, 8, Downloaded from https://onlinelibrary.wiley.com/doi/10.1111/jne.13318, Wiley Online Library on [13/08/2025]. See the Terms and Conditions (https://onlinelibrary.wiley.com/terms-and-conditions) on Wiley Online Library for rules of use; OA articles are governed by the applicable Creative Commons License

Recommendations:

- Localised low-grade insulinomas are cured by radical surgery and do not require long-term follow-up [3, A].
- Follow-up of functioning Pan-NET should be tailored according to tumour grade, bulk, growth rate and the therapeutic modality [5, A].
- Metachronous functioning syndromes can develop during follow-up, requiring appropriate history taking of Pan-NET patients and, in cases of a suspected new syndrome, subsequent measurement of hormonal levels [5, A].

Conclusion and future perspectives

The management of patients with a functioning Pan-NET syndrome is complex due to its heterogeneous presentation and multisystem involvement. Consequently, work-up and treatment of a (suspected) functioning syndrome should preferably be performed in a multidisciplinary setting and discussed in expert tumour boards.

Due to the rarity and diversity of functioning Pan-NET syndromes many clinical aspects, including the optimal diagnostic work-up and management, have been poorly characterised. These Pan-NET features and their intrinsic heterogeneity[112] have also hampered a detailed understanding of the molecular factors that drive NET cells to cause aberrant hormonal secretion and tumour development, which remain largely unknown. Several recent national registries have been able to increase patient numbers for functioning Pan-NET, allowing for better characterisation of clinical syndromes. However, yearly incidence rates lower than 1 in 100.000–1.000.000 persons require evaluation in multinational patient cohorts, preferably in a prospective fashion. This will aid in determining the optimal cutoff for biochemical diagnosis, which is still needed for these syndromes. Furthermore, it will allow the study of treatment outcomes for functioning Pan-NET, both in terms of hormonal symptom control as well as radical resection rates and antiproliferative capacity. Through international collaboration interventional trials aimed at a well-characterised population within these orphan diseases can also be initiated. It is crucial that these clinical studies are coupled to carefully designed translational research programmes, including systematic collection and analysis of tumour and blood samples from patients. These types of joint collaborative, international projects will foster translational research in order to decipher the molecular underpinnings of Pan-NET tumourigenesis, identify potential biomarkers for disease prognosis and response prediction and discover new druggable targets. Recently, large scale international collaborative studies are enabling the characterisation through omics approaches of the main molecular layers of Pan-NET.[34,113,114] Ongoing efforts should focus on mining and extracting the clinically useful information from these studies in order to better classify, stratify, and diagnose functioning Pan-NET. Furthermore, elucidation of (duodenal and) pancreatic neuroendocrine cell function through contemporary molecular techniques, in vitro primary tumour cell cultures and development of patient-derived organoids and tumour xenografts, can be of major assistance in future diagnostic and therapeutic strategies in functioning Pan-NET syndromes.

AUTHOR CONTRIBUTIONS

Johannes Hofland: Conceptualization; methodology; supervision; writing – original draft; writing – review and editing. **Massimo Falconi:** Conceptualization; writing – original draft; writing – review and editing. **Emanuel Christ:** Conceptualization; writing – original draft; writing – review and editing. **Justo P. Castaño:** Conceptualization; writing – original draft; writing – review and editing. **Antonio Faggiano:** Conceptualization; writing – original draft; writing – review and editing. **Angela Lamarca:** Conceptualization; writing – original draft; writing – review and editing. **Aurel Perren:** Conceptualization; writing – original draft; writing – review and editing. **Simona Petrucci:** Conceptualization; writing – original draft; writing – review and editing. **Vikas Prasad:** Conceptualization; writing – original draft; writing – review and editing. **Philippe Ruszniewski:** Conceptualization; writing – original draft; writing – review and editing. **Christina Thirlwell:** Conceptualization; writing – original draft; writing – review and editing. **Marie-Pierre Vullierme:** Conceptualization; writing – original draft; writing – review and editing. **Staffan Welin:** Conceptualization; writing – original draft; writing – review and editing. **Detlef Klaus Bartsch:** Conceptualization; supervision; writing – original draft; writing – review and editing.

ACKNOWLEDGMENTS

Participants of the ENETS Guidance Paper Consensus Meeting – 13 October 2022

Begum, N. (Department for General-, Visceral-, Thoracic- and Endocrine Surgery, Johannes-Wesling-Klinikum Minden, University Hospital of the Ruhr-University Bochum, Germany); Capdevila, J. (Medical Oncology Department, Gastrointestinal and Endocrine Unit, Vall d'Hebron University Hospital, Barcelona, Spain); Couvelard, A. (Pathology Department, Bichat Hospital, AP-HP and Université Paris Cité, Paris, France); De Mestier, L. (Beaujon Hospital, Université Paris-Cité, Pancreatology and Digestive Oncology, Paris, France); Denecke, T. (Klinik für Diagnostische und Interventionelle Radiologie, Universitätsklinikum Leipzig, Leipzig, Germany); Fazio, N. (Division of gastrointestinal medical oncology and neuroendocrine tumors, European Institute of Oncology (IEO), IRCCS, Milan, Italy); Garcia-Carbonero, R. (Department of Oncology, Hospital Universitario Doce de Octubre, Imas12, UCM, Madrid, Spain); Kaltsas, G. (1st Propaedeutic Department of Internal Medicine, National and Kapodistrian University of Athens, Athens, Greece); Kjaer, A. (Department

13652826, 2023, 8, Downloaded from https://onlinelibrary.wiley.com/doi/10.1111/jne.13318, Wiley Online Library on [13/08/2025]. See the Terms and Conditions (https://onlinelibrary.wiley.com/terms-and-conditions) on Wiley Online Library for rules of use; OA articles are governed by the applicable Creative Commons License

of Clinical Physiology and Nuclear Medicine & Cluster for Molecular Imaging, Copenhagen University Hospital – Rigshospitalet & Department of Biomedical Sciences, University of Copenhagen, Copenhagen, Denmark); Knigge, U. (Departments of Surgery and Clinical Endocrinology, ENETS Center of Excellence, Copenhagen University Hospital, Rigshospitalet, Copenhagen, Denmark); Koumarianou, A. (National and Kapodistrian University of Athens, Hematology Oncology Unit, 4th Department of Internal Medicine, Athens, Greece); O'Toole, D. (National Centre for Neuroendocrine Tumours, St. James's and St. Vincent's University Hospitals & Trinity College Dublin, Dublin, Republic of Ireland); Panzuto, F. (Dept. of Medical-Surgical Sciences and Translational Medicine, Sapienza University of Rome/Digestive Disease Unit, Sant'Andrea University Hospital, ENETS Center of Excellence, Rome, Italy); Pavel, M. (Department of Medicine 1, Universitätsklinikum Erlangen, Erlangen, Germany); Ramage, J. K. (Kings Health Partners NET Centre, Institute of Liver Studies, King's College Hospital NHS Foundation Trust, London, United Kingdom/Hampshire Hospitals NHS foundation trust, Hampshire, United Kingdom); Rindi, G. (Section of Anatomic Pathology, Department of Life Sciences and Public Health, Università Cattolica del Sacro Cuore/Unit of Head and Neck, Thoracic and Endocrine Pathology, Department of Woman and Child Health Sciences and Public Health, Fondazione Policlinico Universitario A. Gemelli IRCCS, Roma, Italia/Roma European Neuroendocrine Tumor Society (ENETS) Center of Excellence, Rome, Italy); Santos, A. P. (Endocrinology Department, Endocrine Tumors Clinic, Precancerous Lesions and Early Cancer Management Group, RISE@CI-IPO (Health Research Network), Portuguese Oncology Institute of Porto (IPO Porto)/Porto Comprehensive Cancer Center (Porto.CCC), Porto, Portugal); Srirajaskanthan, R. (Neuroendocrine Tumour Unit, Kings College Hospital/Department of Gastroenterology, Hambleden Wing, Kings College Hospital, London, United Kingdom); Tiensuu Janson, E. (Department of Medical Sciences, Endocrine Oncology, Medical Faculty, Uppsala Universitet, Uppsala, Sweden); Toumpanakis, C. (Neuroendocrine Tumour Unit, ENETS Centre of Excellence, Royal Free Hospital and University College London, London, United Kingdom); van Velthuysen, M. F. (Department of Pathology, Erasmus MC, Rotterdam, The Netherlands); Walter, T. (Department of Medical Oncology, Hôpital Edouard Herriot, Lyon, France).

CONFLICT OF INTEREST

JH has received speaker and/or advisory board fees from Ipsen, Serb and Novartis. MF has no financial disclosures to declare. EC has received honoraria for speaker engagements, from Novartis, Ibsen, Pfizer, HRA Pharma, Novo Nordisk and AAA and for advisory boards from AAA, Pfizer, HRA Pharma, Ricordati Pharma GmBH and Novo Nordisk. JPC has received consulting, travel support or speaker honoraria from Ipsen, AAA, and Novartis. AF has received speaker honoraria or consultation fees as well as research and travel support from Ipsen, Novartis, AAA. AL received travel and educational support from Ipsen, Pfizer, Bayer, AAA, SirtEx, Novartis, Mylan and Delcath; speaker honoraria from Merck, Pfizer, Ipsen, Incyte, AAA, QED, Servier, Astra Zeneca, EISAI, Roche and Advanz Pharma; advisory and consultancy honoraria from EISAI, Nutricia Ipsen, QED, Roche, Servier, Boston Scientific, Albireo Pharma, AstraZeneca, Boehringer Ingelheim, GENFIT, TransThera Biosciences and Taiho; she is a member of the Knowledge Network and NETConnect Initiatives funded by Ipsen. AP has received honoraria for speaker engagements, from Novartis, Ipsen, is shareholder of Roche and Illumina. SP has no financial disclosures to declare. VP has served as a consultant and on the Advisory Board of Bayer, Novartis/AAA, Navigo Proteins, ITM, Ipsen and received speaker's honoraria from Medscape. PR has served as a scientific advisor for Ipsen, AAA and ITM. CT has received conference travel support from Ipsen and Novartis. MPV has served as consultant on the IA department of Guerbet International and received travel and educational support from Ipsen. SW has received speaker fees from Ipsen and AAA. DKB has received speaker fees from Novartis.

PEER REVIEW

The peer review history for this article is available at https://www.webofscience.com/api/gateway/wos/peer-review/10.1111/jne.13318.

DATA AVAILABILITY STATEMENT

Data sharing is not applicable to this article as no new data were created or analyzed in this study.

ORCID

Johannes Hofland https://orcid.org/0000-0003-0679-6209
Marie-Pierre Vullierme https://orcid.org/0000-0002-3667-8943

REFERENCES

1. Falconi M, Eriksson B, Kaltsas G, et al. ENETS consensus guidelines update for the management of patients with functional pancreatic neuroendocrine tumors and non-functional pancreatic neuroendocrine tumors. *Neuroendocrinology*. 2016;103:153-171.
2. Jensen RT, Cadiot G, Brandi ML, et al. ENETS consensus guidelines for the management of patients with digestive neuroendocrine neoplasms: functional pancreatic endocrine tumor syndromes. *Neuroendocrinology*. 2012;95:98-119.
3. Sorbye H, Grande E, Pavel M, et al. European Neuroendocrine Tumor Society (ENETS) 2023 guidance paper for digestive neuroendocrine carcinoma. *J Neuroendocrinol*. 2023;35:e13249.
4. de Mestier L, Hentic O, Cros J, et al. Metachronous hormonal syndromes in patients with pancreatic neuroendocrine tumors: a case-series study. *Ann Intern Med*. 2015;162:682-689.
5. Crona J, Norlen O, Antonodimitrakis P, Welin S, Stalberg P, Eriksson B. Multiple and secondary hormone secretion in patients with metastatic pancreatic neuroendocrine Tumours. *J Clin Endocrinol Metab*. 2016;101:445-452.
6. Cryer PE, Axelrod L, Grossman AB, et al. Evaluation and management of adult hypoglycemic disorders: an Endocrine Society clinical practice guideline. *J Clin Endocrinol Metab*. 2009;94:709-728.
7. Valente LG, Antwi K, Nicolas GP, Wild D, Christ E. Clinical presentation of 54 patients with endogenous hyperinsulinaemic hypoglycaemia: a neurological chameleon (observational study). *Swiss Med Wkly*. 2018;148:w14682.
8. Hirshberg B, Livi A, Bartlett DL, et al. Forty-eight-hour fast: the diagnostic test for insulinoma. *J Clin Endocrinol Metab*. 2000;85:3222-3226.
9. Bakatselos SO. Hypoglycemia unawareness. *Diabetes Res Clin Pract*. 2011;93(Suppl 1):S92-S96.
10. Gu W, Liu Y, Liu H, et al. Characteristics of glucose metabolism indexes and continuous glucose monitoring system (CGMS) in patients with insulinoma. *Diabetol Metab Syndr*. 2017;9:17.

13652826, 2023, 8, Downloaded from https://onlinelibrary.wiley.com/doi/10.1111/jne.13318, Wiley Online Library on [13/08/2025]. See the Terms and Conditions (https://onlinelibrary.wiley.com/terms-and-conditions) on Wiley Online Library for rules of use; OA articles are governed by the applicable Creative Commons License

11. Oest L, Roden M, Mussig K. Comparison of patient characteristics between east Asian and non-east Asian patients with insulin autoimmune syndrome. *Clin Endocrinol (Oxf)*. 2022;96:328-338.
12. Cimmino I, Faggiano A, Perruolo G, et al. Diagnosis of Flier's syndrome in a patient with nondiabetic hypoglycemia: a case report and critical appraisal of the literature. *Endocrine*. 2020;69:73-78.
13. Wiesli P, Schwegler B, Schmid B, Spinas GA, Schmid C. Mini-mental state examination is superior to plasma glucose concentrations in monitoring patients with suspected hypoglycaemic disorders during the 72-hour fast. *Eur J Endocrinol*. 2005;152:605-610.
14. Service FJ. Diagnostic approach to adults with hypoglycemic disorders. *Endocrinol Metab Clin North Am*. 1999;28:519-532. vi.
15. Roy PK, Venzon DJ, Shojamanesh H, et al. Zollinger-Ellison syndrome. Clinical presentation in 261 patients. *Medicine (Baltimore)*. 2000;79:379-411.
16. Ito T, Cadiot G, Jensen RT. Diagnosis of Zollinger-Ellison syndrome: increasingly difficult. *World J Gastroenterol*. 2012;18:5495-5503.
17. Berna MJ, Hoffmann KM, Long SH, Serrano J, Gibril F, Jensen RT. Serum gastrin in Zollinger-Ellison syndrome: II. Prospective study of gastrin provocative testing in 293 patients from the National Institutes of Health and comparison with 537 cases from the literature. Evaluation of diagnostic criteria, proposal of new criteria, and correlations with clinical and tumoral features. *Medicine (Baltimore)*. 2006; 85:331-364.
18. Raines D, Chester M, Diebold AE, et al. A prospective evaluation of the effect of chronic proton pump inhibitor use on plasma biomarker levels in humans. *Pancreas*. 2012;41:508-511.
19. Metz DC. Diagnosis of the Zollinger-Ellison syndrome. *Clin Gastroenterol Hepatol*. 2012;10:126-130.
20. Metz DC, Cadiot G, Poitras P, Ito T, Jensen RT. Diagnosis of Zollinger-Ellison syndrome in the era of PPIs, faulty gastrin assays, sensitive imaging and limited access to acid secretory testing. *Int J Endocr Oncol*. 2017;4:167-185.
21. Stacpoole PW. The glucagonoma syndrome: clinical features, diagnosis, and treatment. *Endocr Rev*. 1981;2:347-361.
22. Wermers RA, Fatourechi V, Wynne AG, Kvols LK, Lloyd RV. The glucagonoma syndrome. Clinical and pathologic features in 21 patients. *Medicine (Baltimore)*. 1996;75:53-63.
23. Bloom SR. Vasoactive intestinal peptide, the major mediator of the WDHA (pancreatic cholera) syndrome: value of measurement in diagnosis and treatment. *Am J Dig Dis*. 1978;23:373-376.
24. Schizas D, Mastoraki A, Bagias G, et al. Clinicopathological data and treatment modalities for pancreatic vipomas: a systematic review. *J BUON*. 2019;24:415-423.
25. Fleseriu M, Auchus R, Bancos I, et al. Consensus on diagnosis and management of Cushing's disease: a guideline update. *Lancet Diabetes Endocrinol*. 2021;9:847-875.
26. Grozinsky-Glasberg S, Davar J, Hofland J, et al. European Neuroendocrine Tumor Society (ENETS) 2022 guidance paper for carcinoid syndrome and carcinoid heart disease. *J Neuroendocrinol*. 2022;34: e13146.
27. Zandee WT, van Adrichem RC, Kamp K, Feelders RA, van Velthuysen MF, de Herder WW. Incidence and prognostic value of serotonin secretion in pancreatic neuroendocrine tumours. *Clin Endocrinol (Oxf)*. 2017;87:165-170.
28. Schneider R, Waldmann J, Swaid Z, et al. Calcitonin-secreting pancreatic endocrine tumors: systematic analysis of a rare tumor entity. *Pancreas*. 2011;40:213-221.
29. Potorac I, Bonneville JF, Daly AF, et al. Pituitary MRI features in acromegaly due to ectopic GHRH secretion from a neuroendocrine tumor: analysis of 30 cases. *J Clin Endocrinol Metab*. 2022;107: e3313-e3320.
30. Borson-Chazot F, Garby L, Raverot G, et al. Acromegaly induced by ectopic secretion of GHRH: a review 30 years after GHRH discovery. *Ann Endocrinol (Paris)*. 2012;73:497-502.
31. Nesi G, Marcucci T, Rubio CA, Brandi ML, Tonelli F. Somatostatinoma: clinico-pathological features of three cases and literature reviewed. *J Gastroenterol Hepatol*. 2008;23:521-526.
32. Garbrecht N, Anlauf M, Schmitt A, et al. Somatostatin-producing neuroendocrine tumors of the duodenum and pancreas: incidence, types, biological behavior, association with inherited syndromes, and functional activity. *Endocr Relat Cancer*. 2008;15:229-241.
33. Brosens LA, Singhi AD, Basturk O, et al. Somatostatinoma. In: Klimstra DS, Osamura RY, eds. *WHO classification of tumours endocrine and neuroendocrine tumours*. International Agency for Research on Cancer; 2023.
34. Scarpa A, Chang DK, Nones K, et al. Whole-genome landscape of pancreatic neuroendocrine tumours. *Nature*. 2017;543:65-71.
35. Penitenti F, Landoni L, Scardoni M, et al. Clinical presentation, genotype-phenotype correlations, and outcome of pancreatic neuroendocrine tumors in Von Hippel-Lindau syndrome. *Endocrine*. 2021; 74:180-187.
36. Yu R. Mahvash disease: 10 years after discovery. *Pancreas*. 2018;47: 511-515.
37. Agarwal SK. The future: genetics advances in MEN1 therapeutic approaches and management strategies. *Endocr Relat Cancer*. 2017; 24:T119-T134.
38. Niederle B, Selberherr A, Bartsch DK, et al. Multiple endocrine neoplasia type 1 and the pancreas: diagnosis and treatment of functioning and non-functioning pancreatic and duodenal neuroendocrine neoplasia within the MEN1 syndrome – an international consensus statement. *Neuroendocrinology*. 2021;111:609-630.
39. Seabrook A, Wijewardene A, De Sousa S, et al. MEN4, the MEN1 mimicker: a case series of three phenotypically heterogenous patients with unique CDKN1B mutations. *J Clin Endocrinol Metab*. 2022;107:2339-2349.
40. Alshikho MJ, Noureldine SI, Talas JM, et al. Zollinger-Ellison syndrome associated with von Recklinghausen disease: case report and literature review. *Am J Case Rep*. 2016;17:398-405.
41. Legius E, Messiaen L, Wolkenstein P, et al. Revised diagnostic criteria for neurofibromatosis type 1 and Legius syndrome: an international consensus recommendation. *Genet Med*. 2021;23: 1506-1513.
42. Mortaji P, Morris KT, Samedi V, Eberhardt S, Ryan S. Pancreatic neuroendocrine tumor in a patient with a TSC1 variant: case report and review of the literature. *Fam Cancer*. 2018;17:275-280.
43. Tamm EP, Bhosale P, Lee JH, Rohren EM. State-of-the-art imaging of pancreatic neuroendocrine tumors. *Surg Oncol Clin N Am*. 2016; 25:375-400.
44. Khanna L, Prasad SR, Sunnapwar A, et al. Pancreatic neuroendocrine neoplasms: 2020 update on pathologic and imaging findings and classification. *Radiographics*. 2020;40:1240-1262.
45. King AD, Ko GT, Yeung VT, Chow CC, Griffith J, Cockram CS. Dual phase spiral CT in the detection of small insulinomas of the pancreas. *Br J Radiol*. 1998;71:20-23.
46. Gouya H, Vignaux O, Augui J, et al. CT, endoscopic sonography, and a combined protocol for preoperative evaluation of pancreatic insulinomas. *AJR Am J Roentgenol*. 2003;181:987-992.
47. Thavaraputta S, Graham S, Rivas Mejia AM, Lado-Abeal J. Duodenal somatostatinoma presenting as obstructive jaundice with the coexistence of a gastrointestinal stromal tumour in neurofibromatosis type 1: a case with review of the literature. *BMJ Case Rep*. 2019;12:12.
48. Puli SR, Kalva N, Bechtold ML, et al. Diagnostic accuracy of endoscopic ultrasound in pancreatic neuroendocrine tumors: a systematic review and meta analysis. *World J Gastroenterol*. 2013;19:3678-3684.
49. Reubi JC, Waser B. Concomitant expression of several peptide receptors in neuroendocrine tumours: molecular basis for in vivo multireceptor tumour targeting. *Eur J Nucl Med Mol Imaging*. 2003; 30:781-793.

13652826, 2023, 8, Downloaded from https://onlinelibrary.wiley.com/doi/10.1111/jne.13318, Wiley Online Library on [13/08/2025]. See the Terms and Conditions (https://onlinelibrary.wiley.com/terms-and-conditions) on Wiley Online Library for rules of use; OA articles are governed by the applicable Creative Commons License

50. Antwi K, Fani M, Heye T, et al. Comparison of glucagon-like peptide-1 receptor (GLP-1R) PET/CT, SPECT/CT and 3T MRI for the localisation of occult insulinomas: evaluation of diagnostic accuracy in a prospective crossover imaging study. *Eur J Nucl Med Mol Imaging*. 2018;45:2318-2327.
51. Imperiale A, Boursier C, Sahakian N, et al. Value of (68)Ga-DOTATOC and carbidopa-assisted (18)F-DOPA PET/CT for insulinoma localization. *J Nucl Med*. 2022;63:384-388.
52. Prasad V, Sainz-Esteban A, Arsenic R, et al. Role of (68)Ga somatostatin receptor PET/CT in the detection of endogenous hyperinsulinaemic focus: an explorative study. *Eur J Nucl Med Mol Imaging*. 2016;43:1593-1600.
53. Wang H, Ba Y, Xing Q, Cai RC. Diagnostic value of ASVS for insulinoma localization: a systematic review and meta-analysis. *PLoS ONE*. 2019;14:31743337.
54. de Carbonnieres A, Challine A, Cottereau AS, et al. Surgical management of insulinoma over three decades. *HPB (Oxford)*. 2021;23:1799-1806.
55. Crippa S, Zerbi A, Boninsegna L, et al. Surgical management of insulinomas: short- and long-term outcomes after enucleations and pancreatic resections. *Arch Surg*. 2012;147:261-266.
56. Belfiori G, Wiese D, Partelli S, et al. Minimally invasive versus open treatment for benign sporadic insulinoma comparison of short-term and Long-term outcomes. *World J Surg*. 2018;42:3223-3230.
57. Su AP, Ke NW, Zhang Y, et al. Is laparoscopic approach for pancreatic insulinomas safe? Results of a systematic review and meta-analysis. *J Surg Res*. 2014;186:126-134.
58. El Sayed G, Frim L, Franklin J, et al. Endoscopic ultrasound-guided ethanol and radiofrequency ablation of pancreatic insulinomas: a systematic literature review. *Therap Adv Gastroenterol*. 2021;14:17562848211042171.
59. Crino SF, Napoleon B, Facciorusso A, et al. Endoscopic ultrasound-guided radiofrequency ablation versus surgical resection for treatment of pancreatic insulinoma. *Clin Gastroenterol Hepatol*. 2023;S1542-3565(23)00165-9. doi: 10.1016/j.cgh.2023.02.022
60. Anlauf M, Garbrecht N, Henopp T, et al. Sporadic versus hereditary gastrinomas of the duodenum and pancreas: distinct clinicopathological and epidemiological features. *World J Gastroenterol*. 2006;12:5440-5446.
61. Norton JA, Alexander HR, Fraker DL, Venzon DJ, Gibril F, Jensen RT. Possible primary lymph node gastrinoma: occurrence, natural history, and predictive factors: a prospective study. *Ann Surg*. 2003;237:650-657. discussion 657–659.
62. Lopez CL, Falconi M, Waldmann J, et al. Partial pancreaticoduodenectomy can provide cure for duodenal gastrinoma associated with multiple endocrine neoplasia type 1. *Ann Surg*. 2013;257:308-314.
63. Santucci N, Gaujoux S, Binquet C, et al. Pancreatoduodenectomy for neuroendocrine tumors in patients with multiple endocrine neoplasia type 1: an AFCE (Association Francophone de Chirurgie Endocrinienne) and GTE (Groupe d'etude des Tumeurs endocrines) study. *World J Surg*. 2021;45:1794-1802.
64. Vinault S, Mariet AS, Le Bras M, et al. Metastatic potential and survival of duodenal and pancreatic tumors in multiple endocrine neoplasia type 1: a GTE and AFCE cohort study (Groupe d'etude des Tumeurs endocrines and Association Francophone de Chirurgie Endocrinienne). *Ann Surg*. 2020;272:1094-1101.
65. Norton JA, Fraker DL, Alexander HR, et al. Surgery increases survival in patients with gastrinoma. *Ann Surg*. 2006;244:410-419.
66. Norton JA, Fraker DL, Alexander HR, Jensen RT. Value of surgery in patients with negative imaging and sporadic Zollinger-Ellison syndrome. *Ann Surg*. 2012;256:509-517.
67. Bartsch DK, Langer P, Rothmund M. Surgical aspects of gastrinoma in multiple endocrine neoplasia type 1. *Wien Klin Wochenschr*. 2007;119:602-608.
68. Krampitz GW, Norton JA, Poultsides GA, Visser BC, Sun L, Jensen RT. Lymph nodes and survival in pancreatic neuroendocrine tumors. *Arch Surg*. 2012;147:820-827.
69. Norton JA, Krampitz GW, Poultsides GA, et al. Prospective evaluation of results of reoperation in Zollinger-Ellison syndrome. *Ann Surg*. 2018;267:782-788.
70. Tamburrino D, Partelli S, Renzi C, et al. Systematic review and meta-analysis on laparoscopic pancreatic resections for neuroendocrine neoplasms (PNENs). *Expert Rev Gastroenterol Hepatol*. 2017;11:65-73.
71. Garg R, Mohammed A, Singh A, et al. EUS-guided radiofrequency and ethanol ablation for pancreatic neuroendocrine tumors: a systematic review and meta-analysis. *Endosc Ultrasound*. 2022;11:170-185.
72. Norton JA, Alexander HR, Fraker DL, Venzon DJ, Gibril F, Jensen RT. Comparison of surgical results in patients with advanced and limited disease with multiple endocrine neoplasia type 1 and Zollinger-Ellison syndrome. *Ann Surg*. 2001;234:495-505. discussion 506.
73. Kong W, Albers MB, Manoharan J, et al. Pancreaticoduodenectomy is the best surgical procedure for Zollinger-Ellison syndrome associated with multiple endocrine neoplasia type 1. *Cancers (Basel)*. 2022;14:1928.
74. van Beek DJ, Nell S, Pieterman CRC, et al. Prognostic factors and survival in MEN1 patients with gastrinomas: results from the Dutch-MEN study group (DMSG). *J Surg Oncol*. 2019;120:966-975.
75. Dickson PV, Rich TA, Xing Y, et al. Achieving eugastrinemia in MEN1 patients: both duodenal inspection and formal lymph node dissection are important. *Surgery*. 2011;150:1143-1152.
76. You YN, Thompson GB, Young WF Jr, et al. Pancreatoduodenal surgery in patients with multiple endocrine neoplasia type 1: operative outcomes, long-term function, and quality of life. *Surgery*. 2007;142:829-836. discussion 836.e1.
77. Albers MB, Manoharan J, Bollmann C, Chlosta MP, Holzer K, Bartsch DK. Results of Duodenopancreatic reoperations in multiple endocrine neoplasia type 1. *World J Surg*. 2019;43:552-558.
78. Gauger PG, Doherty GM, Broome JT, Miller BS, Thompson NW. Completion pancreatectomy and duodenectomy for recurrent MEN-1 pancreaticoduodenal endocrine neoplasms. *Surgery*. 2009;146:801-806. discussion 807–808.
79. d'Assignies G, Fina P, Bruno O, et al. High sensitivity of diffusion-weighted MR imaging for the detection of liver metastases from neuroendocrine tumors: comparison with T2-weighted and dynamic gadolinium-enhanced MR imaging. *Radiology*. 2013;268:390-399.
80. Mayo SC, de Jong MC, Pulitano C, et al. Surgical management of hepatic neuroendocrine tumor metastasis: results from an international multi-institutional analysis. *Ann Surg Oncol*. 2010;17:3129-3136.
81. Morgan RE, Pommier SJ, Pommier RF. Expanded criteria for debulking of liver metastasis also apply to pancreatic neuroendocrine tumors. *Surgery*. 2018;163:218-225.
82. Eriksson J, Stalberg P, Nilsson A, et al. Surgery and radiofrequency ablation for treatment of liver metastases from midgut and foregut carcinoids and endocrine pancreatic tumors. *World J Surg*. 2008;32:930-938.
83. de Mestier L, Zappa M, Hentic O, Vilgrain V, Ruszniewski P. Liver transarterial embolizations in metastatic neuroendocrine tumors. *Rev Endocr Metab Disord*. 2017;18:459-471.
84. Gupta S, Johnson MM, Murthy R, et al. Hepatic arterial embolization and chemoembolization for the treatment of patients with metastatic neuroendocrine tumors: variables affecting response rates and survival. *Cancer*. 2005;104:1590-1602.
85. Kunz PL, Graham NT, Catalano PJ, et al. Randomized study of temozolomide or temozolomide and capecitabine in patients with advanced pancreatic neuroendocrine tumors (ECOG-ACRIN E2211). *J Clin Oncol*. 2023;41:1359-1369.

13652826, 2023, 8, Downloaded from https://onlinelibrary.wiley.com/doi/10.1111/jne.13318, Wiley Online Library on [13/08/2025]. See the Terms and Conditions (https://onlinelibrary.wiley.com/terms-and-conditions) on Wiley Online Library for rules of use; OA articles are governed by the applicable Creative Commons License

86. Matej A, Bujwid H, Wronski J. Glycemic control in patients with insulinoma. *Hormones (Athens)*. 2016;15:489-499.
87. Wilson LM, Castle JR. Stable liquid glucagon: beyond emergency hypoglycemia rescue. *J Diabetes Sci Technol*. 2018;12:847-853.
88. Vezzosi D, Bennet A, Rochaix P, et al. Octreotide in insulinoma patients: efficacy on hypoglycemia, relationships with Octreoscan scintigraphy and immunostaining with anti-sst2A and anti-sst5 antibodies. *Eur J Endocrinol*. 2005;152:757-767.
89. Pavel M, Oberg K, Falconi M, et al. Gastroenteropancreatic neuroendocrine neoplasms: ESMO clinical practice guidelines for diagnosis, treatment and follow-up. *Ann Oncol*. 2020;31:844-860.
90. Oziel-Taieb S, Maniry-Quellier J, Chanez B, Poizat F, Ewald J, Niccoli P. Pasireotide for refractory hypoglycemia in malignant insulinoma: case report and review of the literature. *Front Endocrinol (Lausanne)*. 2022;13:860614.
91. Veltroni A, Cosaro E, Spada F, et al. Clinico-pathological features, treatments and survival of malignant insulinomas: a multicenter study. *Eur J Endocrinol*. 2020;182:439-446.
92. Zandee WT, Brabander T, Blazevic A, et al. Symptomatic and radiological response to 177Lu-DOTATATE for the treatment of functioning pancreatic neuroendocrine tumors. *J Clin Endocrinol Metab*. 2019;104:1336-1344.
93. Bernard V, Lombard-Bohas C, Taquet MC, et al. Efficacy of everolimus in patients with metastatic insulinoma and refractory hypoglycemia. *Eur J Endocrinol*. 2013;168:665-674.
94. Habibollahi P, Bai HX, Sanampudi S, Soulen MC, Dagli M. Effectiveness of liver-directed therapy for the Management of Intractable Hypoglycemia in metastatic insulinoma. *Pancreas*. 2020;49:763-767.
95. Massironi S, Cavalcoli F, Elvevi A, Quatrini M, Invernizzi P. Somatostatin analogs in patients with Zollinger Ellison syndrome (ZES): an observational study. *Endocrine*. 2022;75:942-948.
96. Faggiano A, Modica R, Lo Calzo F, et al. Lanreotide therapy vs active surveillance in MEN1-related pancreatic neuroendocrine tumors < 2 centimeters. *J Clin Endocrinol Metab*. 2020;105:78-84.
97. Dumont RA, Seiler D, Marincek N, et al. Survival after somatostatin based radiopeptide therapy with (90)Y-DOTATOC vs. (90)Y-DOTATOC plus (177)Lu-DOTATOC in metastasized gastrinoma. *Am J Nucl Med Mol Imaging*. 2015;5:46-55.
98. Gorden P, Comi RJ, Maton PN, Go VL, NIH Conference. Somatostatin and somatostatin analogue (SMS 201-995) in treatment of hormone-secreting tumors of the pituitary and gastrointestinal tract and non-neoplastic diseases of the gut. *Ann Intern Med*. 1989;110:35-50.
99. Jin XF, Spampatti MP, Spitzweg C, Auernhammer CJ. Supportive therapy in gastroenteropancreatic neuroendocrine tumors: often forgotten but important. *Rev Endocr Metab Disord*. 2018;19:145-158.
100. Brugel M, Walter T, Goichot B, et al. Efficacy of treatments for VIPoma: a GTE multicentric series. *Pancreatology*. 2021;21:1531-1539.
101. Chen C, Zheng Z, Li B, et al. Pancreatic VIPomas from China: case reports and literature review. *Pancreatology*. 2019;19:44-49.
102. O'Dorisio TM, Mekhjian HS, Gaginella TS. Medical therapy of VIPomas. *Endocrinol Metab Clin North Am*. 1989;18:545-556.
103. Angelousi A, Koffas A, Grozinsky-Glasberg S, et al. Diagnostic and management challenges in vasoactive intestinal peptide secreting tumors: a series of 15 patients. *Pancreas*. 2019;48:934-942.
104. Potorac I, Bonneville JF, Daly AF, et al. Pituitary MRI features in acromegaly resulting from ectopic GHRH secretion from a neuroendocrine tumor: analysis of 30 cases. *J Clin Endocrinol Metab*. 2022;107:e3313-e3320.
105. Zendran I, Gut G, Kaluzny M, Zawadzka K, Bolanowski M. Acromegaly caused by ectopic growth hormone releasing hormone secretion: a review. *Front Endocrinol (Lausanne)*. 2022;13:867965.
106. Bruno OD, Danilowicz K, Manavela M, Mana D, Rossi MA. Long-term management with octreotide or cabergoline in ectopic corticotropin hypersecretion: case report and literature review. *Endocr Pract*. 2010;16:829-834.
107. Kamp K, Feelders RA, van Adrichem RC, et al. Parathyroid hormone-related peptide (PTHrP) secretion by gastroenteropancreatic neuroendocrine tumors (GEP-NETs): clinical features, diagnosis, management, and follow-up. *J Clin Endocrinol Metab*. 2014;99:3060-3069.
108. Kovacova M, Filkova M, Potocarova M, Kinova S, Pajvani UB. Calcitonin-secreting pancreatic neuroendocrine tumors: a case report and review of the literature. *Endocr Pract*. 2014;20:e140-e144.
109. Angeletti S, Corleto VD, Schillaci O, et al. Use of the somatostatin analogue octreotide to localise and manage somatostatin-producing tumours. *Gut*. 1998;42:792-794.
110. El-Hajj Fuleihan G, Clines GA, Hu MI, et al. Treatment of hypercalcemia of malignancy in adults: an Endocrine Society clinical practice guideline. *J Clin Endocrinol Metab*. 2023;108:507-528.
111. Chen J, Yang Y, Liu Y, Kan H. Prognosis analysis of patients with pancreatic neuroendocrine tumors after surgical resection and the application of enucleation. *World J Surg Oncol*. 2021;19:11.
112. Pedraza-Arevalo S, Gahete MD, Alors-Perez E, Luque RM, Castano JP. Multilayered heterogeneity as an intrinsic hallmark of neuroendocrine tumors. *Rev Endocr Metab Disord*. 2018;19:179-192.
113. Young K, Lawlor RT, Ragulan C, et al. Immune landscape, evolution, hypoxia-mediated viral mimicry pathways and therapeutic potential in molecular subtypes of pancreatic neuroendocrine tumours. *Gut*. 2021;70:1904-1913.
114. Lakis V, Lawlor RT, Newell F, et al. DNA methylation patterns identify subgroups of pancreatic neuroendocrine tumors with clinical association. *Commun Biol*. 2021;4:155.

How to cite this article: Hofland J, Falconi M, Christ E, et al. European Neuroendocrine Tumor Society 2023 guidance paper for functioning pancreatic neuroendocrine tumour syndromes. *J Neuroendocrinol*. 2023;35(8):e13318. doi:10.1111/jne.13318

13652826, 2023, 8, Downloaded from https://onlinelibrary.wiley.com/doi/10.1111/jne.13318, Wiley Online Library on [13/08/2025]. See the Terms and Conditions (https://onlinelibrary.wiley.com/terms-and-conditions) on Wiley Online Library for rules of use; OA articles are governed by the applicable Creative Commons License